770

In-ground Swing Gate Operator

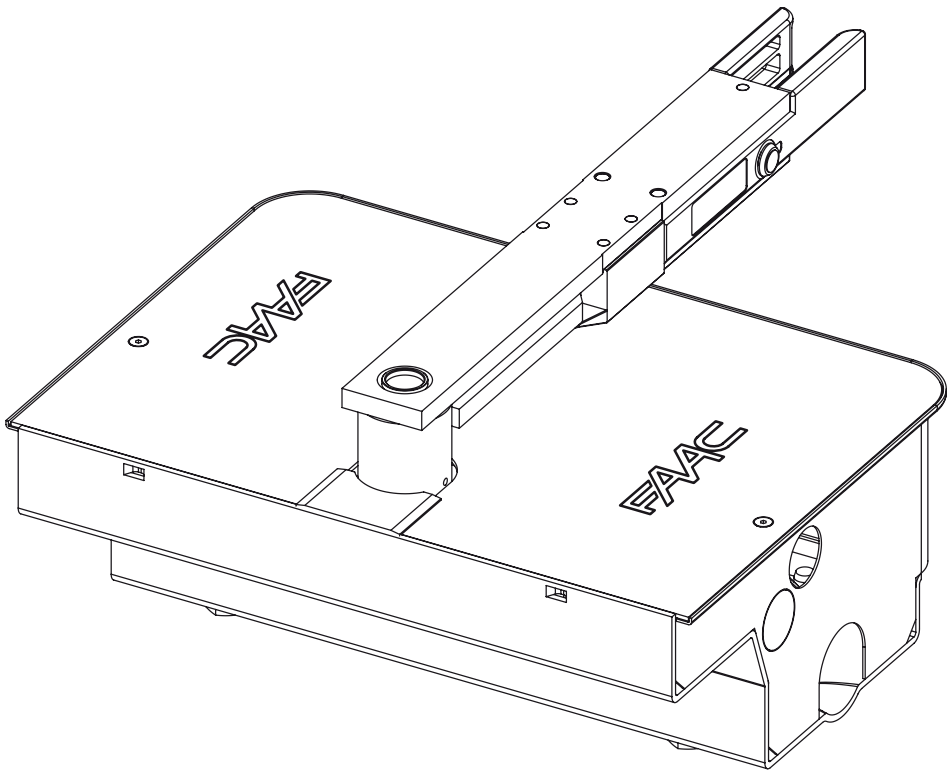

Intertek
UL325 - UL991

FAAC International Inc.
Headquarter & East Coast Operations
3160 Murrell Road
Rockledge, FL 32955
Tel. 800 221 8278
www.faacusa.com

FAAC International Inc.
West Coast Operations
357 South Acacia Avenue
Fullerton, CA 92831

TABLE OF CONTENTS

IMPORTANT SAFETY INFORMATION **3**

Important Safety Instructions 3
Important Installation Instructions 3
General Safety Precautions 4
UL325 Gate Operator Classifications 5
Installing the Warning Signs 5

1. DESCRIPTION & SPECIFICATIONS **6**

1.1. Technical Specifications 6
1.2. Dimensions 6
1.3. Electrical Setup 6

2. INSTALLATION **7**

2.1. Preliminary Checks 7
2.2. Installing the foundation box 7
2.3. Setting up the gate 7
2.4. Installing the Operator 8

3. POSITIVE STOPS **9**

4. MANUAL OPERATION **9**

4.1. Restoring Normal Operation 9

5. MAINTENANCE AND REPAIRS **9**

6. SPARE PARTS DIAGRAM **10**

E024U CONTROL BOARD **12**

770 Rev. B September 2016

IMPORTANT SAFETY INFORMATION

Important Safety Instructions

WARNING - TO REDUCE THE RISK OF SEVERE INJURY OR DEATH:

- READ AND FOLLOW ALL INSTRUCTIONS.
- Never let children operate or play with the gate controls. Keep remote controls away from children.
- Always keep people and objects away from the gate. NO ONE SHOULD CROSS THE PATH OF A MOVING GATE.
- Test the gate operator monthly. The gate MUST reverse on contact with a rigid object or when an object activates a non-contact sensor. If necessary, adjust the force or the limit of travel and then retest the gate operator. Failure to properly adjust and retest the gate operator can increase the risk of injury or death.
- Use the manual release mechanism only when the gate is not moving.
- KEEP GATE PROPERLY MAINTAINED. Have a qualified service person make repairs to gate hardware.
- The entrance is for vehicles only. Pedestrians must use a separate entrance.
- SAVE THESE INSTRUCTIONS.

Important Installation Instructions

1. Install the gate operator only when the following conditions have been met:
   - The operator is appropriate for the type and usage class of the gate.
   - All openings of a horizontal slide gate have been guarded or screened from the bottom of the gate to a minimum of 4 feet (1.25 m) above the ground to prevent a 2.25 inch (55 mm) diameter sphere from passing through openings anywhere in the gate or through that portion of the adjacent fence that the gate covers when in the open position.
   - All exposed pinch points are eliminated or guarded.
   - Guarding is supplied for exposed rollers.
2. The operator is intended for installation on gates used by vehicles only. Pedestrians must be provided with a separate access opening.
3. To reduce the risk of entrapment when opening and closing, the gate must be installed in a location that allows adequate clearance between the gate and adjacent structures. Swinging gates shall not open outward into public access areas.
4. Before installing the gate operator, ensure that the gate has been properly installed and that it swings freely in both directions. Do not over-tighten the operator clutch or pressure relief valve to compensate for a damaged gate.
5. User controls must be installed at least 6 feet (1.83 m) away from any moving part of the gate and located where the user is prevented from reaching over, under, around or through the gate to operate the controls. Controls located outdoors or those that are easily accessible shall have security features to prevent unauthorized use.
6. The Stop and/or Reset buttons must be located within line-of-sight of the gate. Activation of the reset control shall not cause the operator to start.
7. All warning signs and placards must be installed and easily seen within visible proximity of the gate. A minimum of one warning sign shall be installed on each side of the gate.
8. For gate operators that utilize a non-contact sensor (photo beam or the like):
   - See instructions on the placement of non-contact sensors for each type of application.
   - Exercise care to reduce the risk of nuisance tripping, such as when a vehicle trips the sensor while the gate is still moving.
   - Locate one or more non-contact sensors where the risk of entrapment or obstruction exists, such as at the reachable perimeter of a moving gate or barrier.
   - Use only "FAAC Photobeam" or "EMX IRB-RET" photo-electric eyes to comply with UL325.

Important Installation Instructions (continued)

9. For gate operators that utilize a contact sensor (edge sensor or similar):
   - Locate one or more contact sensors where the risk of entrapment or obstruction exists, such as at the leading edge, trailing edge, and post mounted both inside and outside of a vehicular horizontal slide gate
   - Locate one or more contact sensors at the bottom edge of a vehicular vertical lift gate.
   - Locate one or more contact sensors at the bottom edge of a vertical barrier (arm).
   - Locate one or more contact sensors at the pinch point of a vehicular vertical pivot gate.
   - Locate hard-wired contact sensors and wiring so that communication between sensor and gate operator is not subjected to mechanical damage.
   - Locate wireless contact sensors, such as those that transmit radio frequency (RF) signals, where the transmission of signals are not obstructed or impeded by building structures, natural landscaping or similar hindrances. Wireless contact sensors shall function under their intended end-use conditions.
   - Use only FAAC MSE MO, CN60 or M60 edge sensors.

⚠ *General Safety Precautions*

Gate Construction

Vehicular gates should be constructed and installed in accordance with ASTM F2200: Standard Specification for Automated Vehicular Gate Construction.

For more information, contact ASTM at: ***www.astm.org***

Installation

- If you have any questions or concerns regarding the safety of the gate operating system, do not install the operator and consult the manufacturer.
- The condition of the gate structure itself directly affects the reliability and safety of the gate operator.
- Only qualified personnel should install this equipment. Failure to meet this requirement could cause severe injury and/or death, for which the manufacturer cannot be held responsible.
- The installer must provide a main power switch that meets all applicable safety regulations.
- It is extremely unsafe to compensate for a damaged gate by increasing hydraulic pressure.
- Install devices such as reversing edges and photo beams to provide better protection for personal property and pedestrians. Install reversing devices that are appropriate to the gate design and application.
- Before applying electrical power, ensure that voltage requirements of the equipment correspond to the supply voltage. Refer to the label on your gate operator system.

Usage

- Use this equipment only in the capacity for which it was designed. Any use other than that stated should be considered improper and therefore dangerous.
- The manufacturer cannot be held responsible for damage caused by improper, erroneous or unreasonable use.
- If a gate system component malfunctions, disconnect the main power before attempting to repair it.
- Do not impede the movement of the gate, you may injure yourself or damage the gate system as a result.
- This equipment may reach high thermal temperatures during normal operation, therefore use caution when touching the external housing of the gate operator.
- Use the manual release mechanism according to the procedures presented in this manual.
- Before performing any cleaning or maintenance operations, disconnect power to the equipment.
- All cleaning, maintenance or repair work must be performed by qualified personnel.

UL325 Gate Operator Classifications

RESIDENTIAL VEHICULAR GATE OPERATOR CLASS I

A vehicular gate operator system intended for use in a single family dwelling, garage or associated parking area.

COMMERCIAL / GENERAL ACCESS VEHICULAR GATE OPERATOR CLASS II

A vehicular gate operator system intended for use in commercial locations or buildings such as multi-family housing units (five or more single family units), hotels, parking garages, retail stores or other buildings that service the general public.

INDUSTRIAL / LIMITED ACCESS VEHICULAR GATE OPERATOR CLASS III

A vehicular gate operator system intended for use in industrial locations or buildings such as factories, loading docks or other locations not intended to service the general public.

RESTRICTED ACCESS VEHICULAR GATE OPERATOR CLASS IV

A vehicular gate operator system intended for use in guarded industrial locations or buildings such as airport security areas or other restricted access locations that do not service the general public, and in which unauthorized access is prevented via supervision by security personnel.

Installing the Warning Signs

This FAAC swing gate operator is supplied with two warning signs to alert people that a possible hazard exists and that appropriate actions should be taken to avoid the hazard or to reduce exposure to it.

Permanently install one warning sign on each side of the gate so they are fully visible to traffic and pedestrians.

Use appropriate hardware such as metal screws (not supplied) to permanently install each warning sign.



770 OPERATOR

1. DESCRIPTION AND SPECIFICATION

The FAAC 770 is an electromechanical operator for swing gates. It is designed for in-ground installation and therefore does not alter the appearance of the gate.
The supplied support box allows you to setup the gate before actually installing the operator.
The 770 electromechanical operator is not reversible, so it ensures a mechanical stop and eliminates the need for an electric lock.

The 770 Operator is designed and manufactured to automate vehicular swing gates. Do not use for any other purpose.

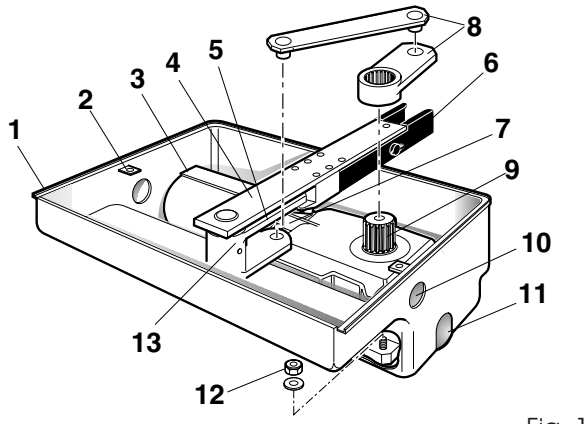

Fig. 1

1 Support Box
2 Cover Fastening Holes
3 770 Operator
4 Gate Support Bracket
5 Locking Bracket
6 Release Device with Key
7 Operator Ground Connection
8 Articulate lever
9 Pinion
10 Hole for Power Cable
11 Hole for Drain Pipe
12 Operator Fastening Bolts
13 Lubrication Hole

1.1 Technical Specifications

Power Supply	24 Vdc
Power	70 W
Current	3 A
Maximum Torque	221 lbf.ft (300 Nm)
Temperature Range	4°F +131°F (-20 °C +55°C)
Use frequency	100%
Class of operation	Residential
Angular speed	6°/sec
Operator Weight	26 lb (12 Kg)
Max Leaf Opening Angle	110° (140° and 180° with optional kit)
Protection class	IP 67
Operator dimensions	14 x 6 x 5.5 in (360 x 150 x 140 mm)
Foundation box dimension	See Fig. 3
Max Leaf Length	11.5 ft (3.5 m) - 110° 9.8 ft (3 m) - 180° 8.2 ft (2.5 m) - 140°
Max Leaf Weight	1100 lb (500 Kg)

1.2 Electrical Setup

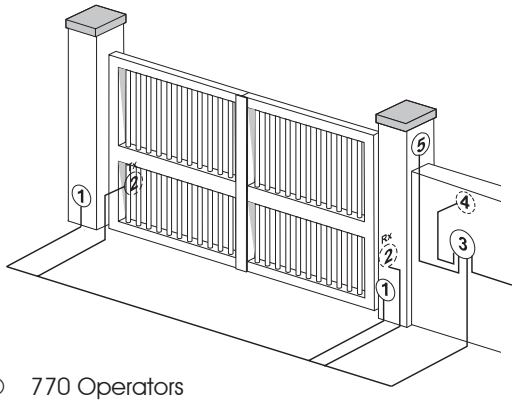

Fig. 2

① 770 Operators
② Photocells
③ Control Unit
④ Pushbutton
⑤ Receiver

Operator Cable Size
2x AWG 14 (max 30')
AWG 12 (max 50')
AWG 10 (max 100')

Always separate the connection cables of the low voltage accessories from the high voltage power cables. Use separate conduits to avoid interference.

The installer is responsible for grounding the gate and operator systems, for providing the main power breaker switch, and for making sure that the entire gate system meets all applicable electrical codes.

Make sure to locate all controls that operate the gate system at least 6 ft away from any moving parts.

1.3 Dimensions

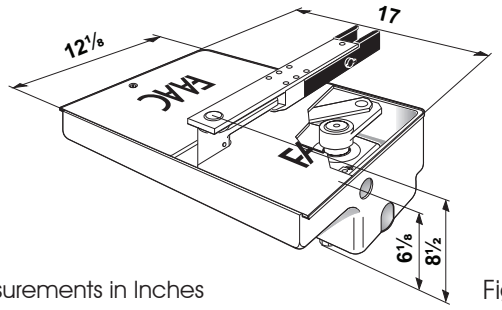

* Measurements in Inches

Fig. 3

2. INSTALLATION

2.1 Preliminary checks

To ensure a correctly operating automated system, the structure of the existing gate or gate to be built must satisfy the following requirements:

- Leaf dimensions are within the limits
- The gate swings level
- Smooth, uniform leaf movement, without any irregular friction during the entire travel
- Existing hinges in good condition
- Positive stops are provided in the fully opened and closed positions
- There is a minimum clearance between the bottom edge of gate and ground. See Fig. 6a (where 'S' = thickness of guide bracket)

2.2 Installing the foundation box

1. Dig a hole for the foundation box as shown in Fig. 5.
2. Place the foundation box in the hole, refer to the dimensions provided in Figs. 6a and 6b.

The center of the pivot on the foundation box must be perfectly aligned with the leaf's axis of rotation (Figs 6a and 6b).

3. Install a 1-3/8" Liquid Tight Conduit, it must be long enough to reach from the box to the control unit (Fig. 7). Install also a second conduit to drain water from the box (also Fig. 7).
4. Secure the box in place with a concrete pour.

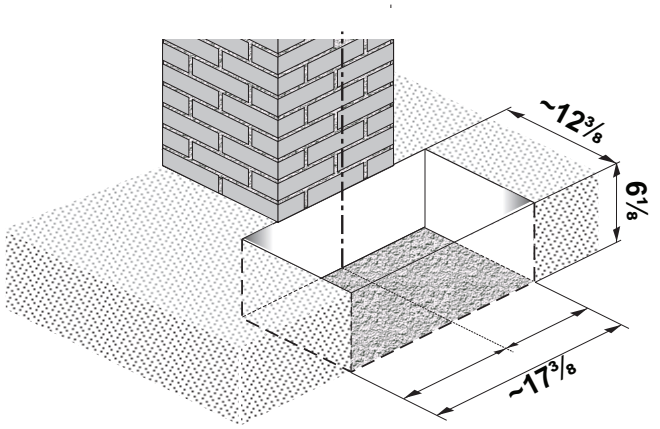

* Measurements in Inches Fig. 5

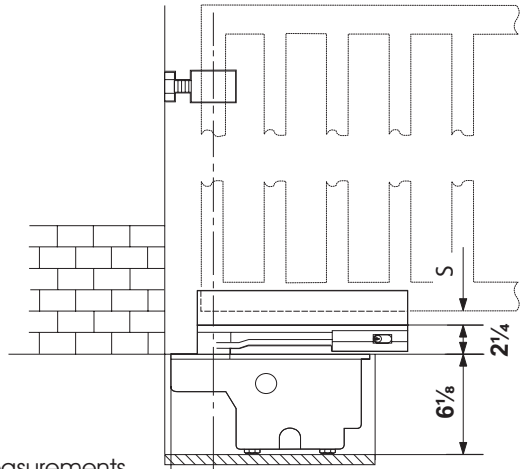

* Measurements in Inches Fig. 6a

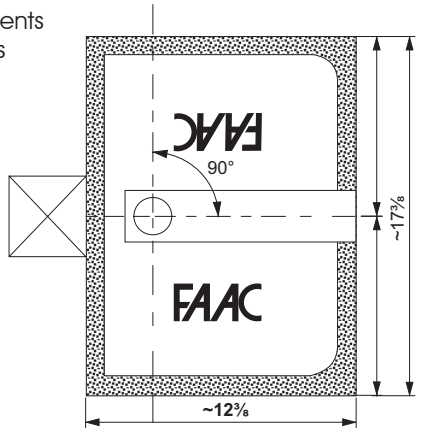

* Measurements in Inches Fig. 6b

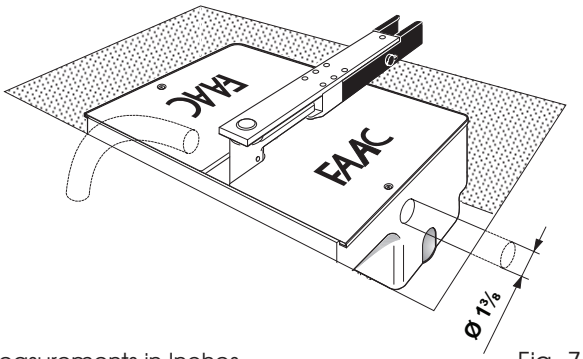

* Measurements in Inches Fig. 7

Depending on the nature of the ground, it may be necessary to cast a bed of quick-setting concrete at the bottom of the hole to avoid future subsidence.

2.3 Setting up the gate

Allow the concrete to set before starting this operation.

1. Assemble the release levers on the support bracket, and fit the latter on the pivot in the foundation box, also inserting the supplied ball (Fig. 8).

Note: grease both the pivot and the ball.

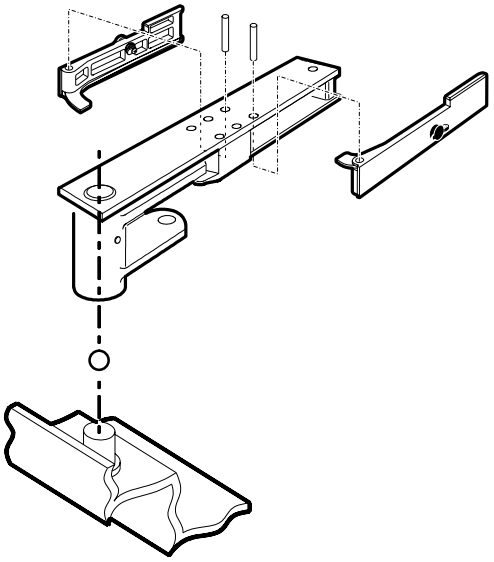

Fig. 8

2. Prepare the guide bracket, as follows:

- Use a "U" profile with dimensions indicated in Fig. 9.

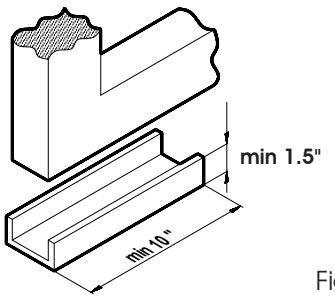

Fig. 9

- Determine the correct location of the leaf on the "U" profile with reference to the axis of rotation (Fig. 10a and 10b);
- Close the "U" profile on the post side with a small plate, as shown in Figs. 10a and 10b.

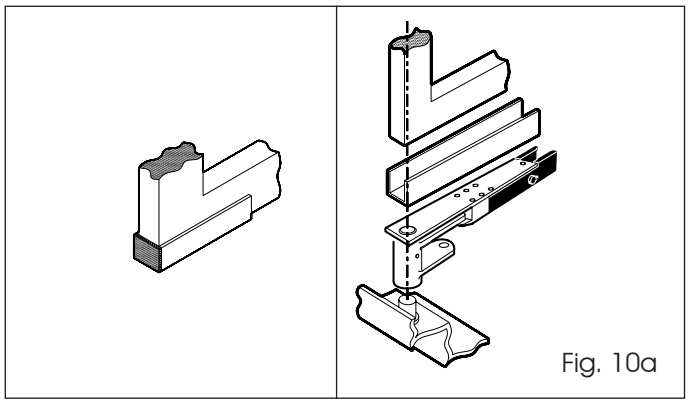

Fig. 10a

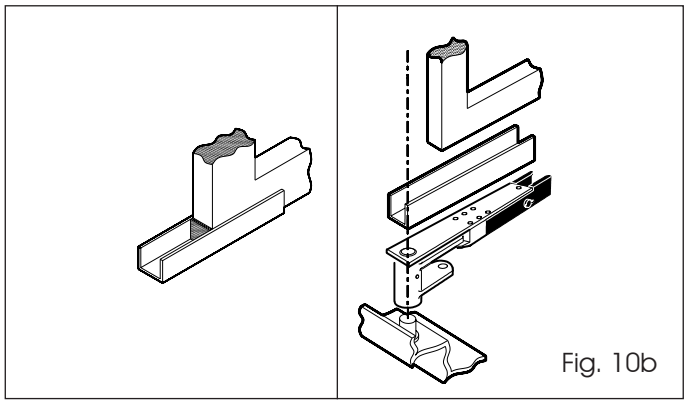

Fig. 10b

3. Carefully weld the guide bracket to the support bracket (Fig. 11).
4. Fit the gate into the guide bracket and fix the top hinge in place.

IMPORTANT: To ensure trouble-free operation, do NOT weld the gate leaf to the guide bracket or to the support bracket.

5. Manually verify whether the gate opens and closes completely and smoothly, stopping at the mechanical travel stops.

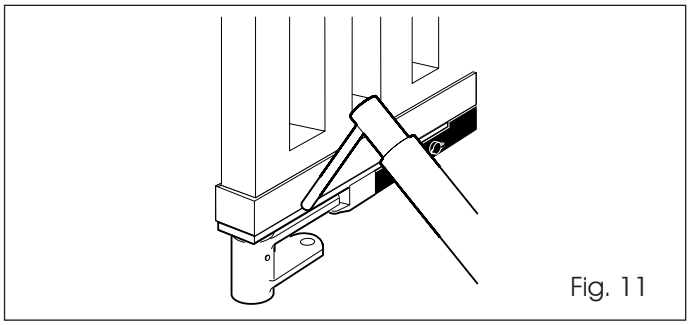

Fig. 11

2.4 Installing the operator

1. Open the gate leaf.
2. Place the operator on the fastening bolts on the foundation box, and secure it using the supplied nuts and washers (Fig. 13).

Note: the exact position of the operator is shown in Fig. 12. In any case, the operator pinion must be on the opposite side of leaves opening direction.

3. Manually close the leaf and assemble the supplied driving levers, as shown in Fig. 13.

Note: grease the operator pinion and the pivots of the two levers.

4. Install the second operator, if required, by repeating the operations described above.
5. Install the electronic control unit. Refer to the relative instructions.
6. Fasten the box cover using the supplied screws (Fig. 14).

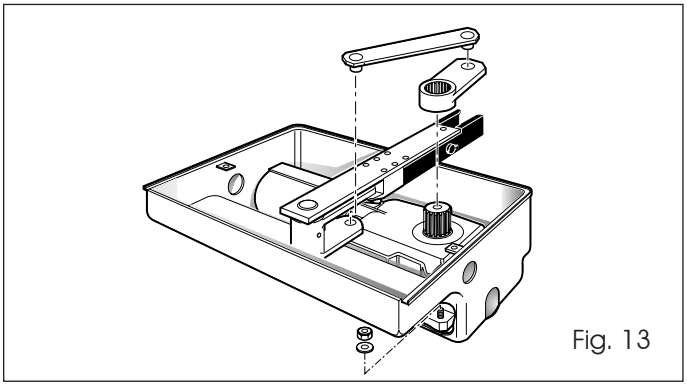

Fig. 13

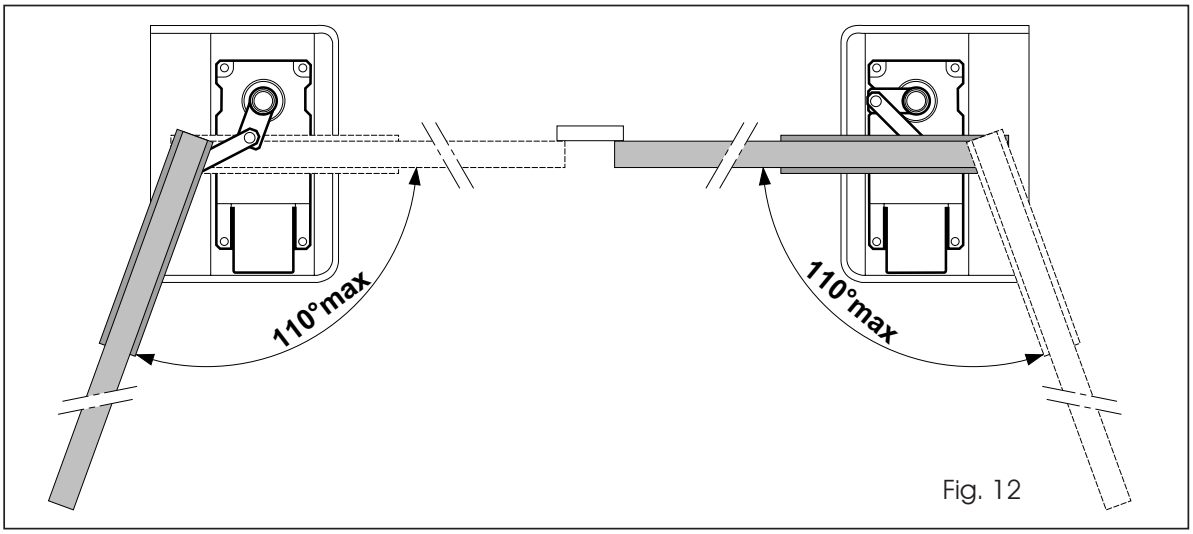

Fig. 12

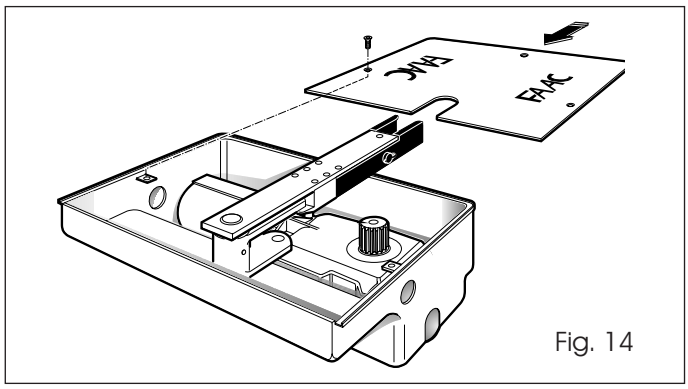

Fig. 14

3. POSITIVE STOPS (optional)

Optional mechanical positive stops can be installed in the load bearing box as indicated in Fig. 15. They can be adjusted to properly limit the gate leaf travel.

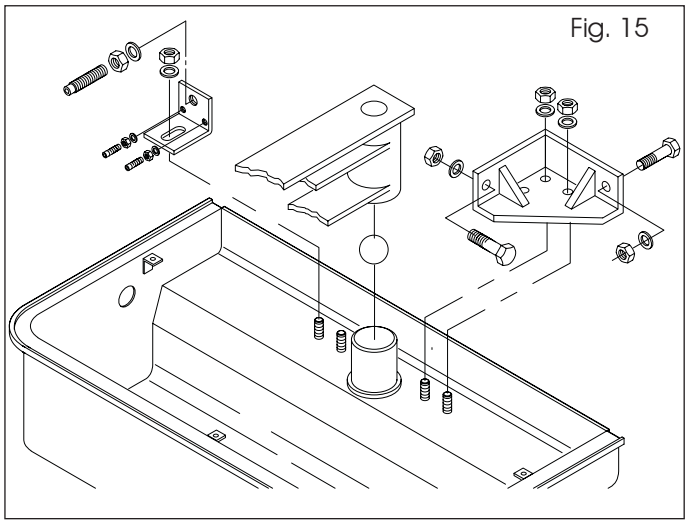
Fig. 15

4. MANUAL OPERATION

If the gate has to be operated manually in the event of a power outage or fault of the operator, use the keyed release device on the support bracket (Fig. 1 - Ref. 6). The operator can be released from both the inside and the outside of the gate.

To operate the leaf manually, proceed as follows:

1. Disconnect power to the system to avoid accidental gate movement.
2. Open the cover of the lock (Fig. 16 - Ref. 1)
3. Insert the release key in the lock (Fig. 16 - Ref. 2).
4. Turn the key in the direction of the post, as far as it will go (Fig. 16 - Ref. 3).
5. Pull the lever out (Fig. 16 - Ref. 4).
6. Operate the leaf manually.

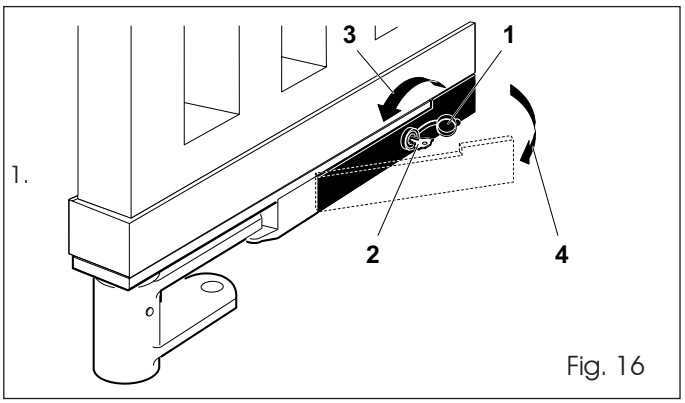

Fig. 16

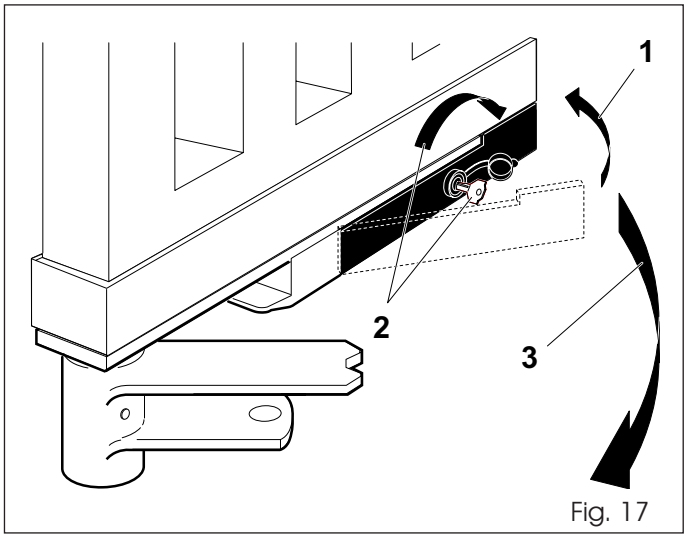

Fig. 17

4.1 Restore Normal Operation

To restore normal operation, proceed as follows:

1. Push the lever back into its home position (Fig. 17 - Ref. 1).
2. Insert the release key into the lock and turn it as far as it will turn in the direction opposite the post (Fig. 17 - Ref. 2).
3. Operate the leaf manually until the lock is engaged in the locking bracket (Fig. 17 - Ref. 3).
4. Close the cover on the lock.
5. Restore power and test the system

5. MAINTENANCE

At regular intervals, check the structure of the gate and make sure that the hinges are in perfect working order.

Periodically lubricate the pivot and ball in the support bracket, through the lubricating hole shown in Fig. 1- Ref. 13. Make sure that the pivots of the lever systems, the pinion and the engagement of the lock on the locking bracket (Fig. 1 - Ref. 5) are always well lubricated, and check the efficiency of the manual operation.

REPAIRS

For repairs, refer to an authorized FAAC service center.

5. SPARE PARTS DIAGRAMS

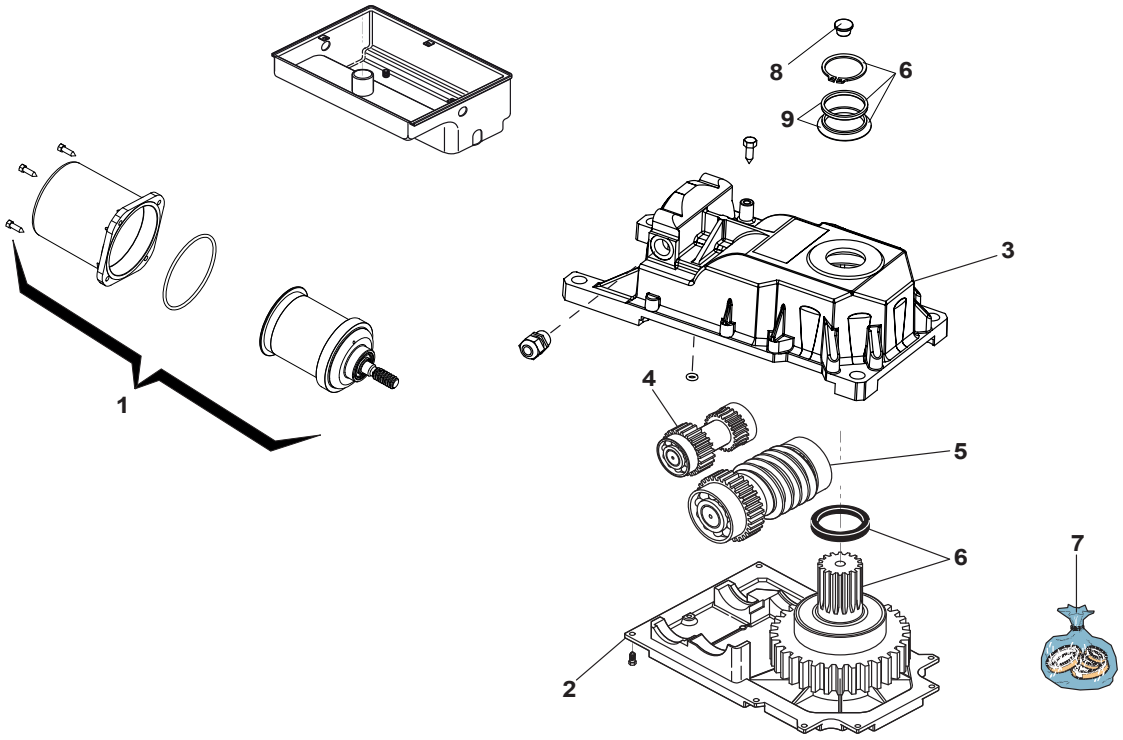

Part	Part Number	Description
1	770770	770 24V Motor
2	716078	Gear Box
3	727158	Gear Box Cover
4	718075	Secondary Shaft
5	718076	Internal Shaft Group
6	719165	Slow Shaft
7	390451	Seal Kit
8	63000452	Cap
9	63000590	V-Ring Seal And Spacer

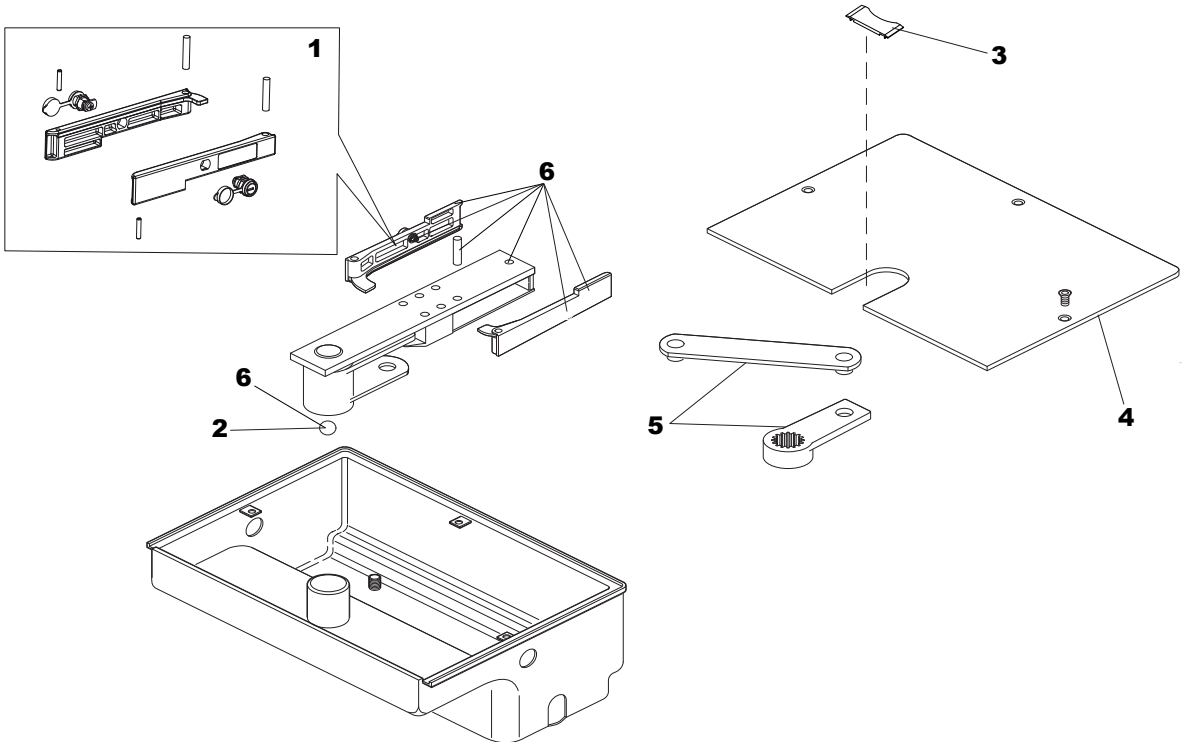

Part	Part Number	Description
1	63000422	Release Levers Kit With Locks
2	63003015	Steel Ball
3	7271985	Cover Plug
4	727157	Box Cover
5	390477	Articulated Lever
6	424010	Manual Release Assembly

1. E024U CONTROL BOARD DESCRIPTION & CHARACTERISTICS

This manual refers to board version 1D

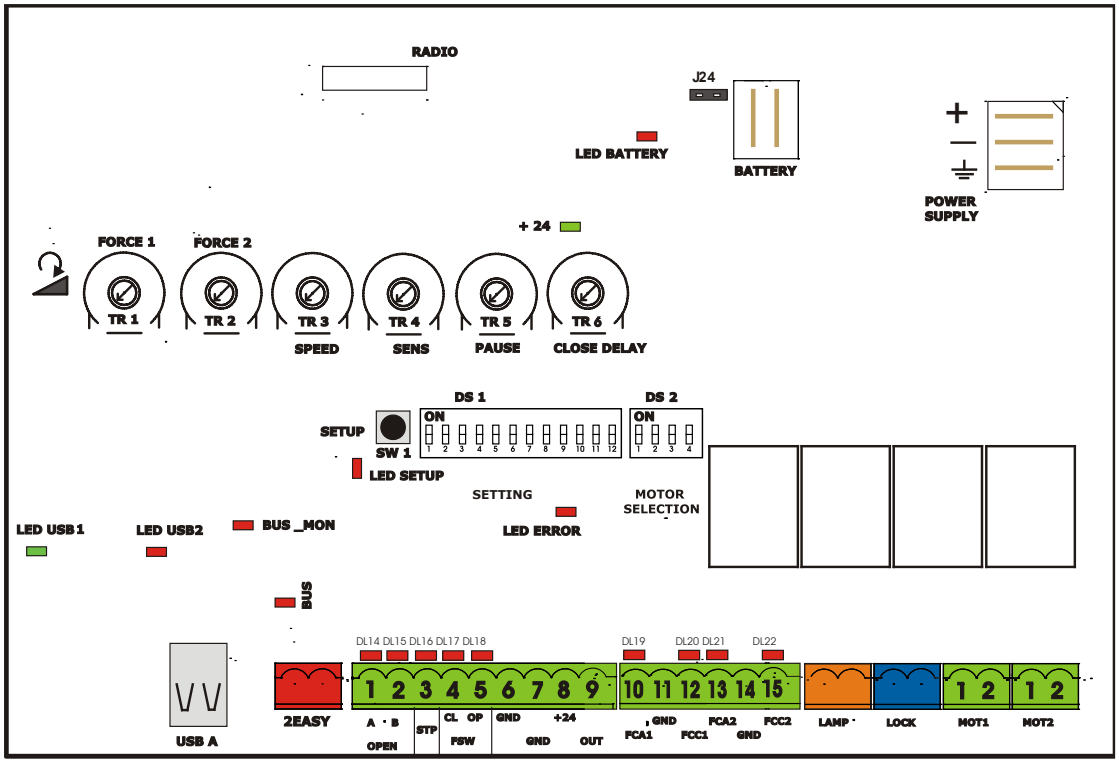

Fig. A1

1.1 TECHNICAL SPECIFICATIONS

Main power supply	115 V~ 60 Hz
Secondary power supply	24 Vdc - 16 A max. (min. 20 Vdc. - max. 36 Vdc.)
Power consumption	stand-by = 4W max. = 400 W
Max load per motor	7 A
Accessory power	24 Vdc - 500 mA
Battery charge current	150 mA
Operating temperature	-4 °F +131 °F (-20 °C +55 °C)
Protection fuses	All self-resetting
Main power fuse	6.3 A Timed
Operating Logics	E, A, S, EP, AP, SP, B, C
Operating time out	10 min.
Pause time	Programmable (0 to 4 min)
Motor force, speed, obstacle sensitivity, closing delay	Programmable with dedicated trimmer
Connector inputs	Power supply, Battery, Radio receiver, USB
Terminal strip inputs	Encoder, Open A, Open B, Stop, Open safety photocell, Closing safety photocell, Limit switches
Terminal strip outputs	Audio Alarm, Lock, Motors, Accessory power supply
Programming	With trimmers, dipswitches and pushbutton

1.2 LAYOUT AND COMPONENTS

RADIO	Connector for the radio receiver
BATTERY	Connector for the backup battery
J24	Jumper to disable battery charging (With the jumper present the battery charger is enabled)
POWER SUPPLY	DC Power supply input
TR1 to TR6	Programming Trimmers
+24 LED	DC power indicator
SW1 - SETUP	Pushbutton for automatic setup
DS1 - DS2	Programming dipswitches
LED ERROR	Troubleshooting indicator
USB A	USB connection for software upgrade

1.3 RADIO CONNECTION

On the radio connector it's possible to plug in receivers RP and RP2. With a single channel radio RP it will be possible to activate only the OPEN A input, with a dual channel radio RP2 it will be possible to activate both OPEN A and OPEN B inputs. Plug in the radio board with the component side towards the internal part of the board.

⚠ Make sure you insert or disconnect the board ONLY with the power off.

2. INPUT / OUTPUT DESCRIPTION

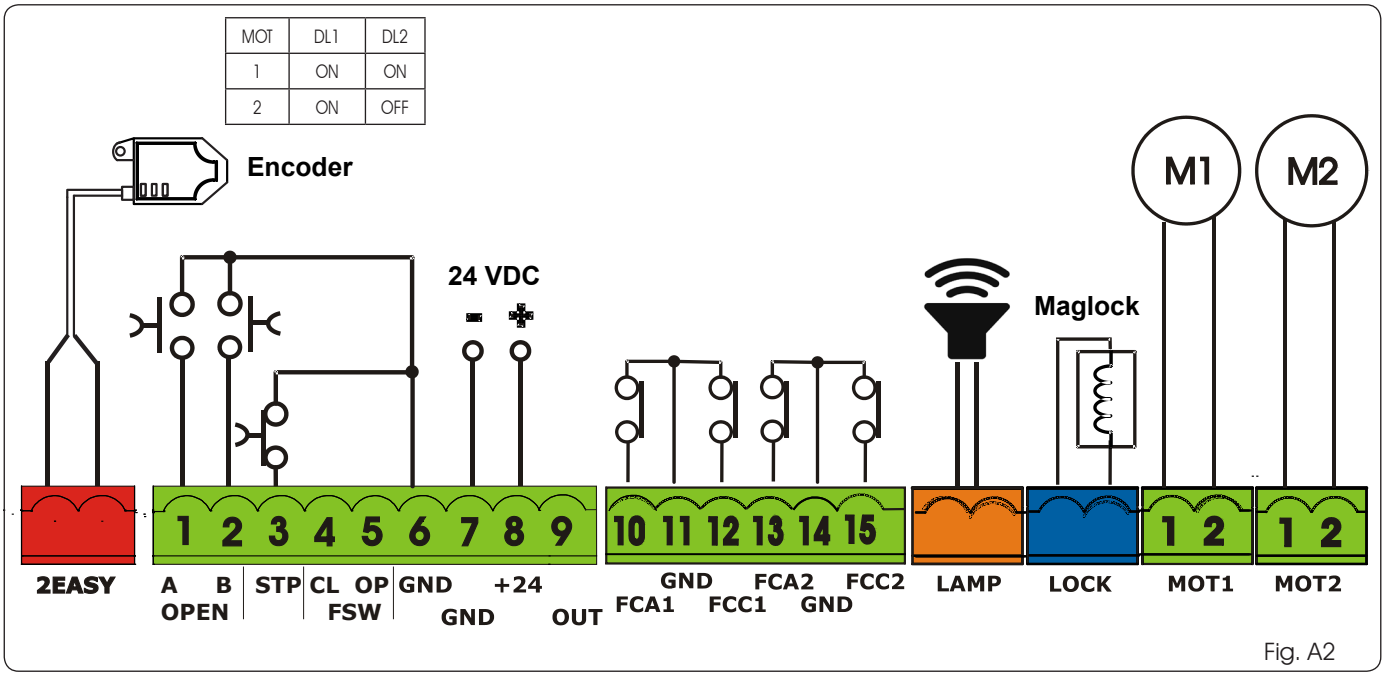

Fig. A2

PIN	LABEL	FUNCTION
2 EASY	2 EASY	2easy BUS input for encoders (S800H and S450H only), XIB and loop detector boards
1	OPEN A	N.O. Contact for total opening command
2	OPEN B / CLOSE	OPEN B: N.O. Contact for opening of leaf 1 only (with only one leaf the opening stops at 50% of traveling) CLOSE (LOGIC B-C): N.O. Contact for closing command
3	STOP	N.C. Contact for stop command
4	FSW CL	N.C. Contact for closing safety
5	FSW OP	N.C. Contact for opening safety
6	GND (-)	24 Vdc negative
7	GND (-)	24 Vdc negative
8	+ 24	24 Vdc positive
9	OUT (-)	24 Vdc negative for safety TX photocell (monitored)
10	FCA 1	Open limit switch Motor 1
11	GND (-)	24 Vdc negative
12	FCC 1	Close limit switch Motor 1
13	FCA 2	Open limit switch Motor 2
14	GND (-)	24 Vdc negative
15	FCC2	Close limit switch Motor 2
LAMP	LAMP	Audio Alarm output
LOCK	LOCK	Output for electrical lock, max 5A pulse (DS2 - SW 4=OFF) 12 Vac / 24Vdc Always ON (maglock): max 1 A (DS2 - SW 4=ON) 24 Vdc
MOT1	MOT 1	Motor 1 output (first moving motor)
MOT2	MOT 2	Motor 2 output (second moving motor)
USB A	USB	Firmware upgrade input

3. SAFETY DEVICE CONNECTIONS

Entrapment protection

To comply with the UL325 standard for gate operators every entrapment zone, as defined in ASTMF2200, must be protected by two independent entrapment protection devices. One of the devices is inherent in the E024U control boards design, the other can be external, like a photocell or an edge sensor.

See this picture for the photocells positioning:

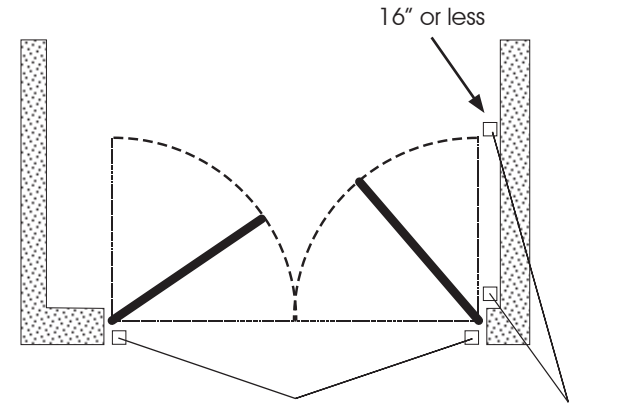

Fig. A3

Opening Safety Devices:

Are active only during the gate opening movement, and are suitable for protecting the area between the opening leaves and fixed obstacles (walls, etc) against the risk of entrapment

Closing Safety Devices:

Are active only during the gate closing movement, and are suitable for protecting the closing area against the risk of entrapment.

Monitored Devices:

Additionaly the UL325 standard requires that every external entrapment protection device must be monitored for presence and correct operation. To comply with this requirement the E024U control board uses the FAILSAFE function. This function tests the photocells before each movement of the operator. In case the test fails the movement is inhibited. This function is enabled by default on the Closing Safety Input and can be enabled on the Opening Safety Input using dip-switch 12 of DS1 ON.
The power supply negative of the transmitter must be connected to the OUT pin (No.9).

See Fig. A6, A7, A8, A10 for wiring examples.

Connection of One Pair of Monitored Closing Photocells

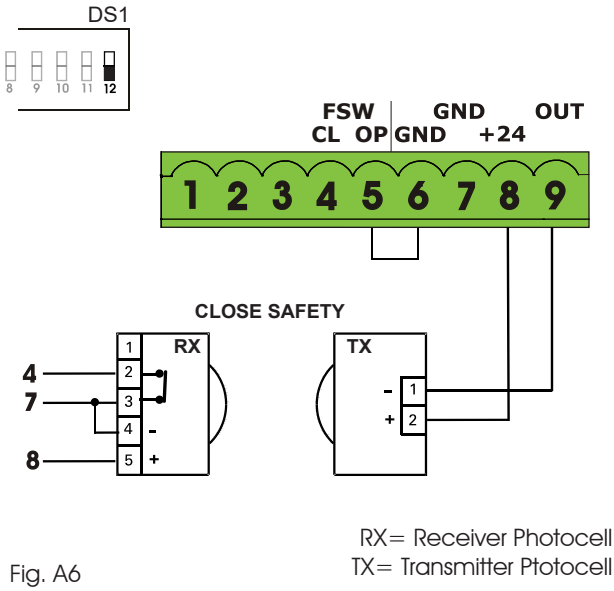

Fig. A6

RX= Receiver Photocell
TX= Transmitter Ptotocell

Connection of One Pair of Monitored Opening Photocells and One Pair of Monitored Closing Photocells

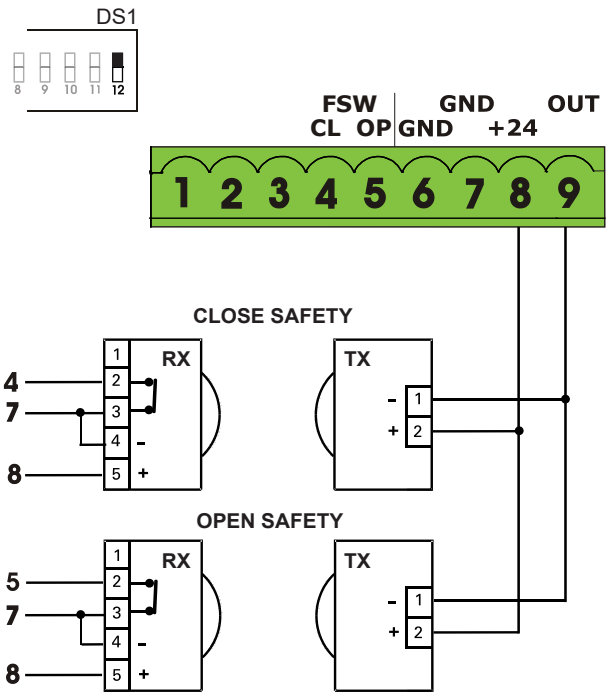

Fig. A7

RX= Receiver Photocell
TX= Transmitter Ptotocell

Only one monitored photocell can be connected to the Closing or Opening safety inputs. More than one photocell or other device can be connected to the safety inputs, but they will not be monitored.

Other devices connected to the safety inputs must have normally closed contacts and wired in series with the main monitored sensor.

See the following example of one closing safety monitored photocell and one non monitored one.

Connection of Two Pairs of Closing Photocells, One Monitored and One non Monitored

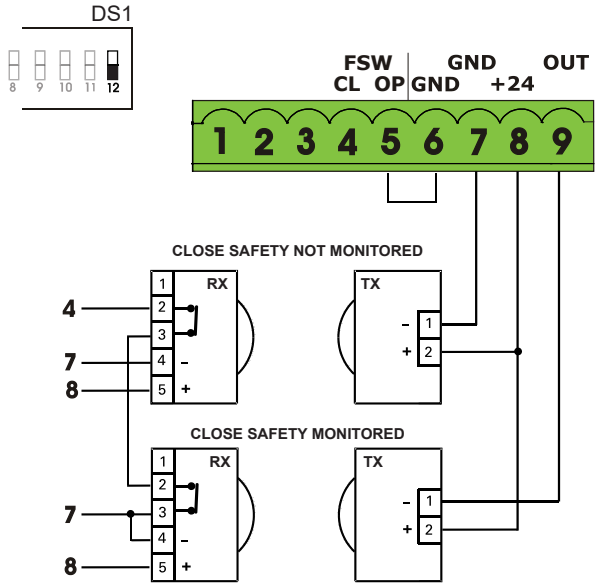

RX= Receiver Photocell
TX= Transmitter Ptotocell

Fig. A8

Opening/Closing Safety Devices:

They operate during the gate opening and closing movements and are suitable to protect the opening and closing areas against the risk of impact. Typically these photocells work in combination with other monitored photocell protecting closing or opening entrapment zones. In that case they can't be monitored so they can only protect against potential impact on vehicles.

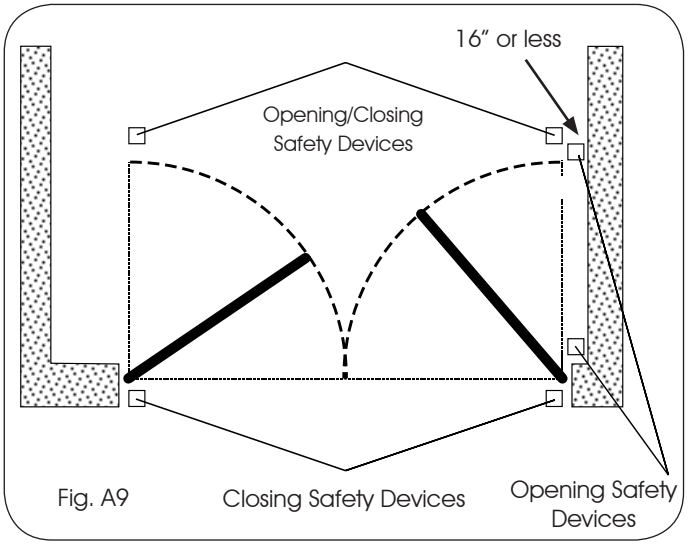

Fig. A9

Connection of One Pair of Closing Photocells (monitored), One Pair of Opening Photocells (monitored) and One pair of Opening/Closing Photocells (non monitored)

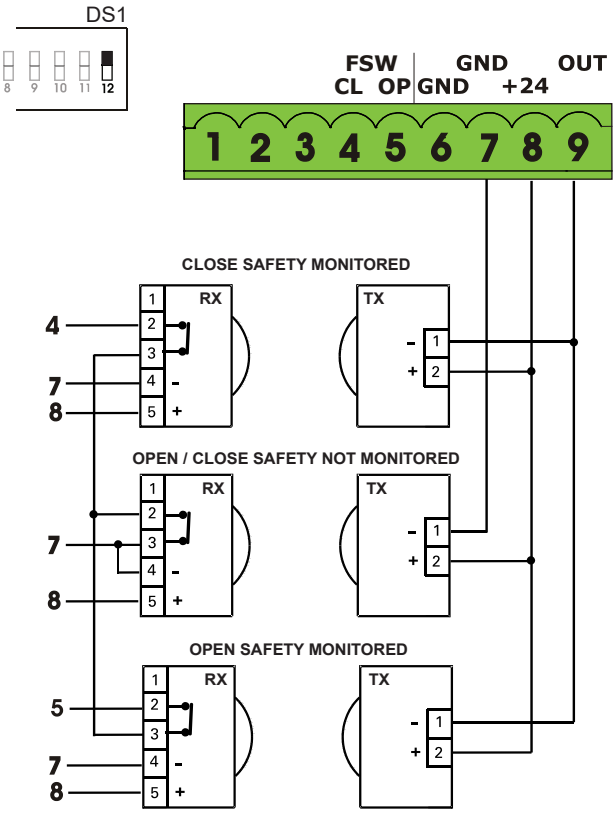

RX= Receiver Photocell
TX= Transmitter Ptotocell

Fig. A10

4. PROGRAMMING

4.1 DIP SWITCH DS1 SETTINGS FOR OPERATING LOGIC

OPERATING LOGIC

DS 1: SW 1 - SW 2 - SW 3



LOGIC	SW 1	SW 2	SW 3	PAUSE TIME	DESCRIPTION
E (default) Semiautomatic	OFF	OFF	OFF	NO	One command opens, the next one closes. A command during opening stops the gate
A Automatic	ON	ON	ON	0 - 4 min	One command opens, waits for the pause time an then closes automatically
S Security	OFF	OFF	ON	0-4 min	One command opens, waits for the pause time and then closes automatically. If the closing safety is activated or another command is given during the pause time it closes. A maintained open command will not hold the gate open
EP Semiautomatic step by step	OFF	ON	OFF	NO	One command opens, the next one closes. During the movement a command stops the gate
AP Automatic step by step	OFF	ON	ON	0-4 min	One command opens, waits for the pause time and then closes automatically. A command during the pause time holds the gate open
SP Security step by step	ON	OFF	OFF	0-4 min	One command opens, waits for the pause time and then closes automatically. If the closing safety is activated during pause time the gate closes in 5 s. A command during pause time holds open the gate
B Manned Pulsed	ON	OFF	ON	NO	An open A command opens the gate, an open B command closes the gate
C Manned Constant	ON	ON	OFF	NO	Holding open A active opens the gate, holding Open B active closes the gate

For more details on the operating logics please refer to Chapter 11 - Function Logics

4.2 ADJUSTING TRIMMERS

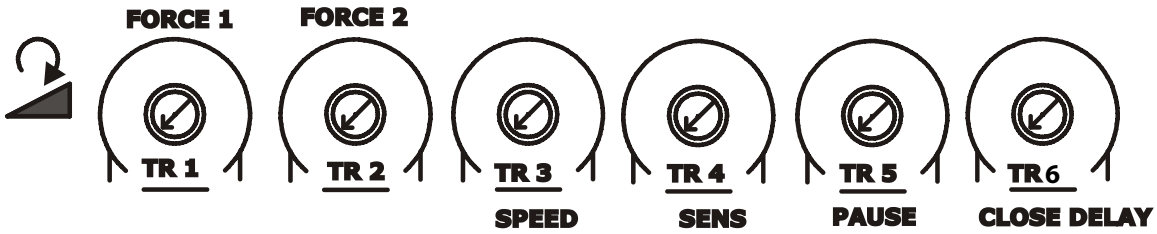

TR1 – FORCE ADJUSTMENT MOTOR 1
Turn clockwise to increase the opening and closing force

TR 2 – FORCE ADJUSTEMENT MOTOR 2
Turn clockwise to increase the opening and closing force

TR 3 – SPEED ADJUSTMENT FOR MOTOR1 AND MOTOR 2
Turn clockwise to increase the opening and closing speed

TR 4 – SENSITIVITY ADJUSTEMENT FOR OBSTACLE DETECTION FOR MOTOR 1 AND MOTOR 2
Turn clockwise to increase the sensitivity for obstacle detection.

See Par. 6.3 for more details about the obstacle detection feature

TR 5 – PAUSE TIME ADJUSTMENT (0 - 4 min.)
Turn clockwise to increase the pause time.

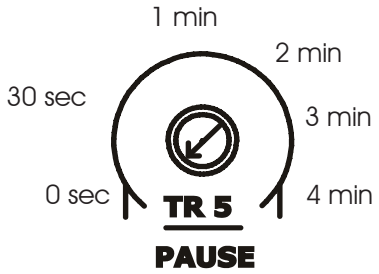

Dip switches DS1: 1 to 3 need to be set for an operating mode with PAUSE time for this adjustment to have any effect

TR6 - CLOSING DELAY OF LEAF 1 OVER LEAF 2 ADJUSTMENT (0 - 15 sec)
Turn clockwise to increase the delay

4.3 DIP SWITCH DS1 SETTINGS FOR BOARD SETUP



BOARD SETUP DS 1: SW 4 to SW 12		
OPENING DELAY	SW 4	The opening of leaf 2 is delayed after the opening of leaf 1. This is to avoid the gate leafs interfering with each other during the initial part of the movement. In case there is only one leaf it has no effect.
0 sec (default)	OFF	
2 sec	ON	
REVERSE AND LAST STROKE	SW 5	If active, before opening, while the gate is closed, the motors thrust to close for 2 s to facilitate the release of the electric lock. At closing the motors are activated for a final stroke after slowdown to facilitate locking of the electric lock.
inactive (default)	OFF	
active	ON	
MAX THRUST AT STARTUP	SW 6	With this fuction active the motors work at maximum force at startup (regardless of the force setting) during the initial phase of the movement. Useful for heavy leaves
inactive (default)	OFF	
active for 3 sec	ON	
AUTOMATIC OPENING IN CASE OF POWER FAILURE	SW 7	If active and with the optional backup battery installed, the board will open the gate after one minute from the power failure and keep it open. Within the minute wait it's always possible to open and close the gate with a command. If the logic used has a pause time the board will close the gate when the power comes back.
inactive (default)	OFF	
active	ON	
CLOSING SAFETY LOGIC	SW 8	With this function you can choose the behavior of the closing safety. With SW8 OFF the gate movement will be reversed as soon as the safety is active, with SW8 ON the gate will stop when the safety is active and it will reverse only when the safety is deactivated.
immediate reverse (default)	OFF	
reverse when cleared	ON	
SHADOW LOOP CONFIGURATION	SW 9	Selects the behavior of the shadow loop function of the XIB accessory OFF: The shadow loop input is active only before a closing command, ignored in any other conditions ON: The shadow loop input is active before a closing and before an opening command. If an open command is given and the shadow loop input is engaged the open command will be ignored even after the shadow loop input goes inactive. NOTE: On the first power up of the board an open command will be always executed (even if the shadow loop is engaged), but at reduced speed.
active only on closing (default)	OFF	
active on closing and opening	ON	
EXTRA SENSITIVITY TO OBSTACLE DETECTION	SW 10	If active this function allows to have an immediate reverse in case the gate hits a rigid obstacle. This function increases the safety of the gate operator, however it can generate unwanted obstacle detections.
inactive (default)	OFF	
active	ON	
24V ACCESSORY VOLTAGE	SW 11	Selects the behavior of the 24V accessory voltage during battery mode: OFF: The accessory voltage and BUS input are turned off in battery backup mode ON: The accessory voltage and BUS input are always active even in battery backup mode
24V OFF in Battery Mode	OFF	
24V ON in Battery Mode	ON	
FAIL SAFE MODE	SW 12	Selects the behavior of the Fail Safe (monitoring) mode: OFF: Fail Safe is active on the closing safety photocell input (FSW CL) only ON: Fail Safe is active on both closing safety photocell input (FSW CL) and opening safety photocell input (FSW OP) NOTE: if using the XIB interface the opening safety on it is also monitored. Refers to the XIB manual for further details.
Closing Safety	OFF	
Closing and Opening Safety	ON	

4.4 DIP SWITCH DS2 SETTINGS FOR OPERATOR TYPE AND LOCK MODE

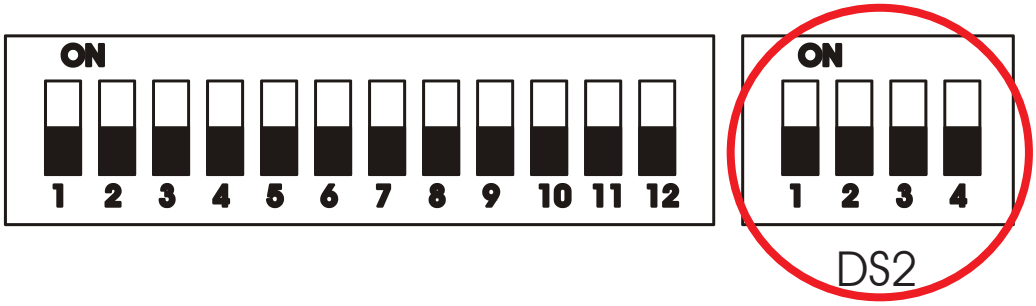



IMPORTANT

DS 2			
OPERATOR SELECTION			
OPERATOR TYPE	SW 1	SW 2	SW 3
S450H, S800H	OFF	OFF	OFF
S418	OFF	OFF	ON
415, 390, 770	ON	OFF	OFF

DS 2	
LOCK OUTPUT MODE	
OUTPUT MODE	SW 4
Active only for 3 sec. after an open impulse (from gate closed)	OFF
Active always except 3 sec. before an opening	ON

5. LED DIAGNOSTICS

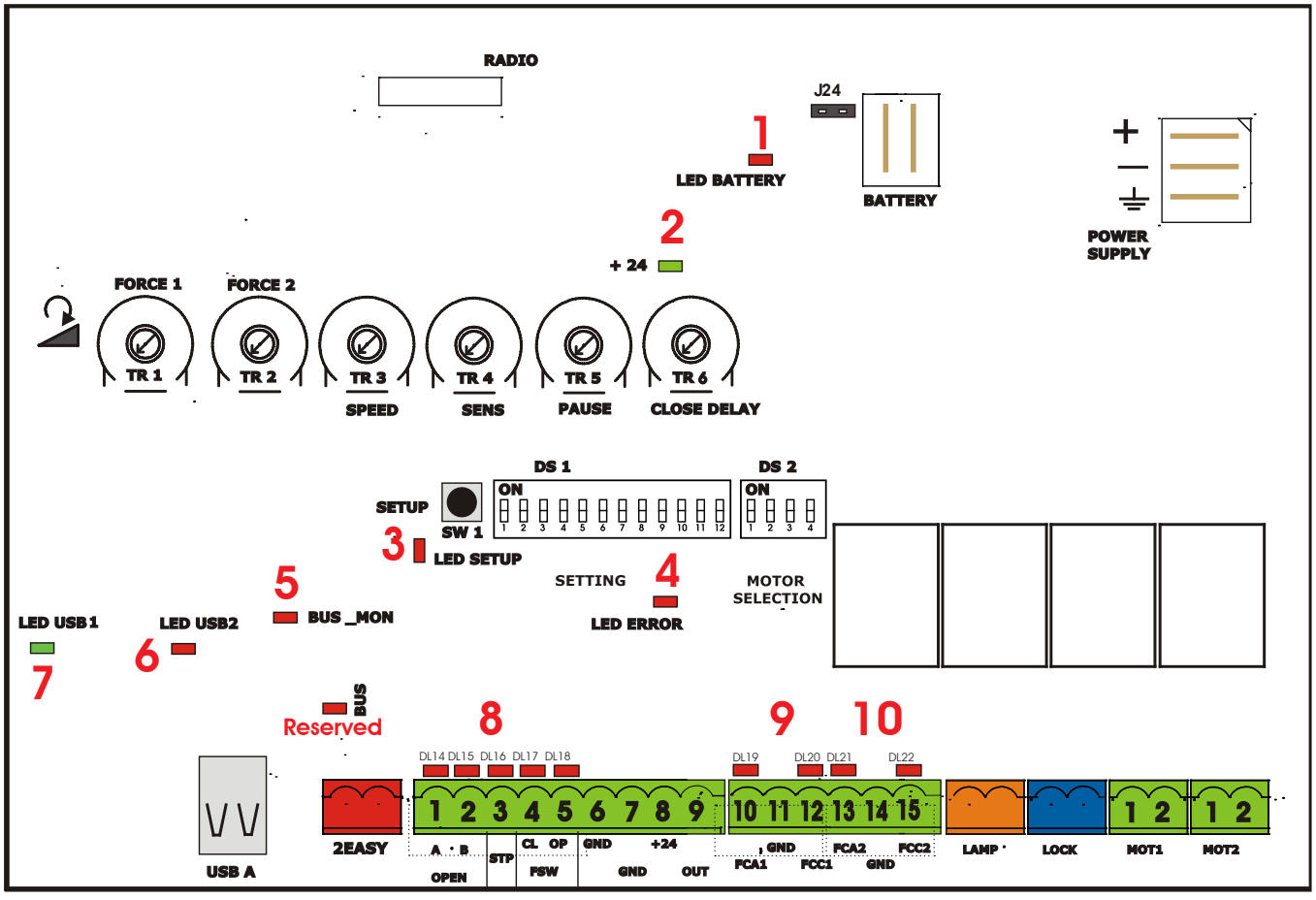

LED	DESCRIPTION	LED STATUS In BOLD the normal state with gate closed and working		
		ON STEADY	OFF	BLINKING
1	LED BATTERY	Board working on AC power	Board working on battery power or ext supply	Battery charging
2	LED +24	**Main power present**	Main power OFF	
3	LED SET-UP		**Normal operation**	SLOW BLINK (1 sec. ON - 1 sec. OFF) SET-UP needed
				FAST BLINK (0.5 sec. ON - 0.5 sec OFF) SET UP in in progress
4	LED ERROR	Board malfunction. See possible causes below	**No errors**	Error conditions. See LED ERROR DISPLAY table
5	LED BUS_MON	**Communication on Bus "2easy" OK**	Communication bus "2Easy" inactive. Verify encoders for shorts	"2Easy" bus devices with the Same address. Verify encoder LEDs
6	LED USB2		**Software update done or USB key not present**	USB key inserted and software Update in progress (DON'T Remove the USB key)
7	LED USB1		**Normal operation**	Number of flashes show version at power up: No Flashes=1C | One flash =1D
8	LED DL 14 OPEN A INPUT (N.O.)	OPEN A active	**OPEN A not active**	
	LED DL 15 OPEN B INPUT (N.O.)	OPEN B active	**OPEN B not active**	
	LED DL 16 STOP INPUT (N.C.)	**STOP non active**	STOP active or wiring error	
	LED DL 17 FSW CL INPUT (N.C.)	**Closing safety devices clear**	Closing safety devices triggered or wiring error	
	LED DL 18 FSW OP INPUT (N.C.)	**Opening safety devices clear**	Opening safety devices triggered or wiring error	
9	LED DL 19 FCA1: OPEN LIMIT SWITCH MOT1 (N.C.)	**Limit switch OFF or not used**	Limit Switch activated	
	LED DL 20 FCC1: CLOSE LIMIT SWITCH MOT1 (N.C.)	Limit switch OFF or not used	**Limit Switch activated**	
10	LED DL 21 FCA2: CLOSE LIMIT SWITCH MOT2 (N.C.)	**Limit switch OFF or not used**	Limit Switch activated	
	LED DL 22 FCC2: CLOSE LIMIT SWITCH MOT2 (N.C.)	Limit switch OFF or not used	**Limit Switch activated**	

BOARD MALFUNCTION ERROR POSSIBLE CAUSES	SOLUTIONS
There were two consecutive obstacle detections (the audio alarm also should sound)	Remove obstructions
One of the motor driver components has failed	The board needs to be repaired
24V accessory power missing	The board needs to be repaired
The idle current in one of the motors is out of range	Check the motors
Both limit switches are active at the same time	Check the limit switches
Input voltage from the power supply is out of range	Check DC input voltage

The diagnostic LED shows only one error condition at a time, with the priority of the below table. In case there is more than one error once one is eliminated the LED will show the next

LED ERROR DISPLAY		
NUMBER OF FLASHES	ERROR CONDITION	SOLUTION
1	OBSTACLE DETECTION	Remove the obstacle, Check force and sensitivity settings
2	BOARD IN SLEEP MODE (Slow blinking means that the automatic open in case of power failure function is active)	Verify the presence of AC power
3	MOTOR 1 FAILURE	Inspect wiring to motor. If the wiring is good replace motor 1
4	MOTOR 2 FAILURE	Inspect wiring to motor. If the wiring is good replace motor 2
5	ENCODER on motor 1 or motor 2 error	• Verify the encoder wiring and LED status. If they are correct replace the encoder • Verify motor and encoder wire gauge are correct • Verify operator is not on manual and hydraulic units don't need to be bled
6	FAIL SAFE FAILED	Verify the photocells wiring and alignement
7	BOARD THERMAL PROTECTION ACTIVE	Turn off the board and wait until the components cool down
8	MAX RUN TIME REACHED WITHOUT FINDING THE POSITIVE STOP (10 min.)	- Verify that the operator manual release is not engaged - Verify that the board recognizes the mechanical stop, in case redo the setup procedure - Verify that the gates slow down before reaching the positive stops. If they don't then redo the setup procedure

6. TIME LEARNING (SET-UP)

After powering up the board for the first time or when the board will need it the setup LED will blink at a slow frequency to indicate that the setup procedure to learn the running times is needed.

The setup can be redone at any time by pressing and holding the setup button as indicated below. The setup cannot be done until the safeties and stop inputs are wired.

After the setup first movement, if the leafs are opening instead of closing you need to reverse the wires going to the motor that moves in the wrong direction

6.1 AUTOMATIC TIME LEARNING

WARNING: If the time learning setup is done automatically then the slow down points are set by the board on his own

Move the leafs to the mid position
Very important for a good result

1. Press and hold the SETUP button until the SETUP LED lights up, wait about 3 sec. until it turns off and then release it immediately. NOTE: If you wait too long to release it the manual set-up will start. The LED will blink during the setup procedure
2. Leaf 2 (if present) starts to move slowly in closing direction, stopping when it reaches the mechanical stop or FCC2.
3. Leaf 1 begins to move slowly in closing direction, stopping when it reaches the mechanical stop, or FCC1.
4. Leaf 1 starts to move slowly in opening direction, followed by leaf 2 (if present) still slowly.
5. When they both reach the open mechanical stop or FCA1 and FCA2 they stop and reverse, leaf 2 (if present) automatically starts closing at full speed followed by leaf 1.
6. When they reach the close mechanical stop or FCC1 and FCC2 both leafs stop and leaf 1 restarts automatically opening at full speed followed by leaf 2 (if present).
7. If you selected an automatic logic the board will wait for the pause time and then closes the gate automatically. Otherwise you have to give an OPEN command to close the gate.

6.2 MANUAL TIME LEARNING

WARNING: If the manual time learning setup is done then the slow down points must be set by the installer during the procedure. **Slow down is required for proper operation.**

Move the leafs to the mid position
Very important for a good result

1. Press and hold the SETUP button until the SETUP LED lights up, keep it pressed for about 3 sec. until it turns off and keep it pressed more until the leaf 2 (if present) starts moving slowly. The LED will blink during the setup procedure
2. Leaf 2 will move in closing direction until it reaches the mechanical stop or FCC2
3. Leaf 1 starts moving slowly until it reaches the mechanical stop or FCC1
4. Leaf 1 starts moving in opening direction at the set speed (trimmer speed).
5. At the point where you want the slowdown to start give an OPEN A command with the push button or the remote that is already stored in memory. Leaf 1 starts to slow down and stops when it reaches the mechanical stop or FCA1.
6. Leaf 2 starts moving in opening direction at the set speed (trimmer speed)

7. At the point where you want the slowdown to start give an OPEN A command with the push button or the remote that is already stored in memory. Leaf 2 starts to slow down and stops when it reaches the mechanical stop or FCA2.
8. Leaf 2 starts to close at the set speed (trimmer speed).
9. At the point where you want the slowdown to start give an OPEN A command with the push button or the remote that is already stored in memory. The leaf 2 starts to slow down and stops when it reaches the mechanical stop or FCC2.
10. Leaf 1 starts to close at the set speed (trimmer speed).
11. At the point where you want the slowdown to start give an OPEN A command with the push button or the remote that is already stored in memory. Leaf 1 starts to slow down and stops when it reaches the mechanical stop or FCC1.
12. The manual time learning procedure is complete.

After time learning test the gate to set the force, speed and sensitivity using the trimmers.

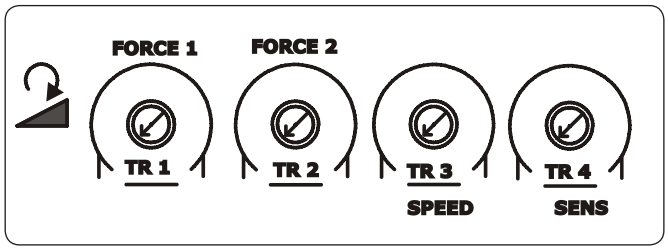

1. Apply resistance to the gate and adjust the Force to make sure that the operator creates enough thrust to reliably move the leaf.
2. Set the desired speed. Keep the speed relatively low on big and heavier gates.
3. After Force and Speed are set to the desired settings adjust the Sensitivity so the gate reverses promptly after hitting a rigid object.
4. After all the adjustments are done perform setup again.

6.3 OBSTACLE DETECTION FUNCTION

The obstacle detection function is achieved by controlling the current absorption and / or through the encoder connected to the motors.

If the gate encounters an obstacle during the movement of opening or closing, the obstacle detection function is activated and the operator reverses the direction of the gate.

In case of a second consecutive obstacle the operator stops the gate right away and any further command is inhibited.
To re-enable the automation, you must remove power (and disconnect batteries if present) or open the STOP contact input.
The Audio Alarm output will be active until this "reset".

This is a more detailed description of what happens after an obstacle detection:

Gate opening, obstacle detected:

The gate reverses partially (for 3 sec.) and STOPS. After that the gate is in a halfway position or completely closed.

If an open_A command is received, the gate tries to open from the current position:

- If there is another obstacle detection: the gate stops completely, the alarm goes off
- If the gate reaches the open position: the obstructions count is reset, the gate returns to normal operations

Gate closing, obstacle detected:

The gate reverses partially (for 3 sec.) and STOPS. After that the gate is in a halfway position or completely open.

If an open_A command is received in NON Automatic mode

- if the gate was not completely open: execute an open
- if the gate was completely open: execute a close

If an open_A command is received in Automatic mode:

- if the gate was not completely open: execute an open, wait for the pause time and then closes.
- if the gate was completely open: reload the pausetime, and then closes

If there is another obstacle detection: the gate stops completely, the alarm goes off.

If the gate reaches the close position: the obstructions count is reset, the gate returns to normal operations

7. ENCLOSURE

The E024U board is supplied on a panel that fits in a 16x14" enclosure.

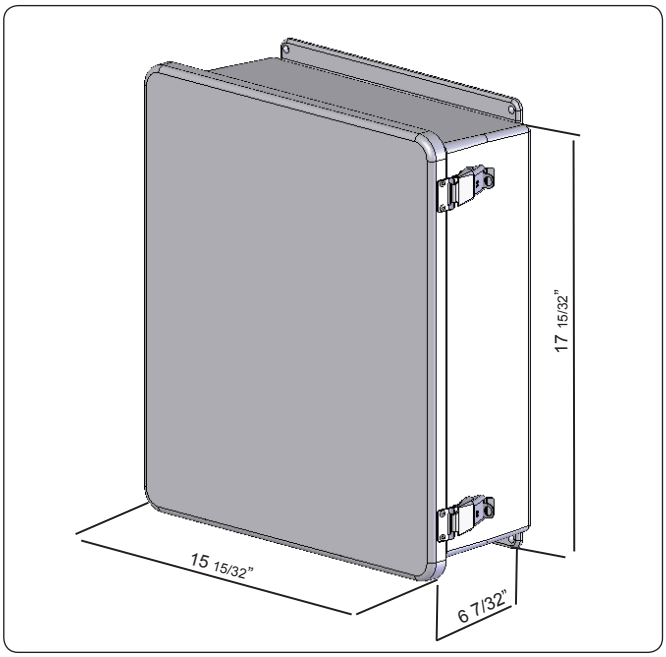

On the back panel there are: the control board, the power supply and additional accessories.

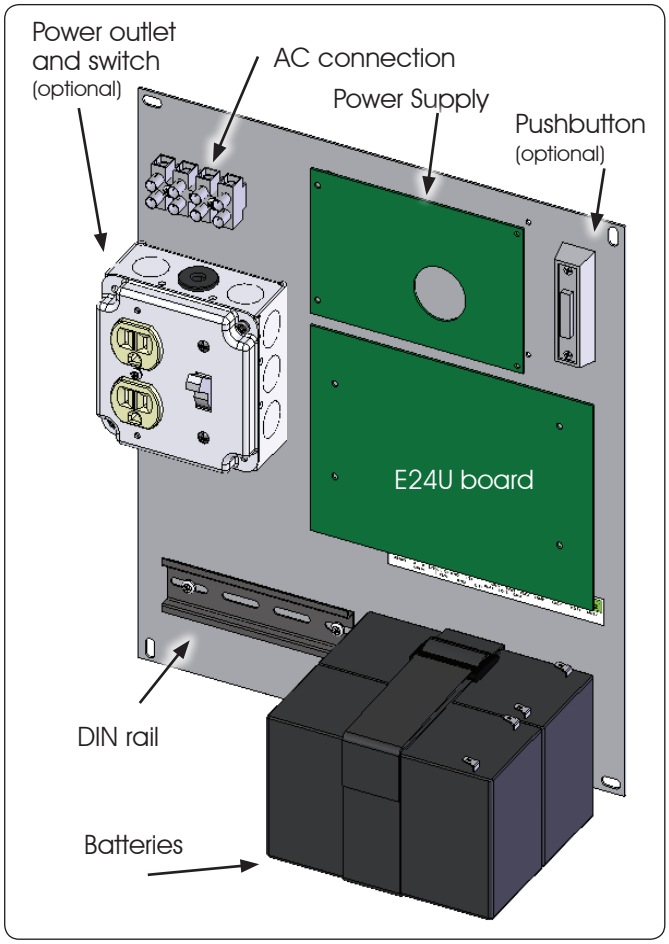

8. POWER CONNECTION

AC POWER GUIDELINES:

THE E024U control board and power supply uses a single phase AC power line to operate, charge the batteries, and power gate accessories. Use the following guidelines when installing the AC power:

1. Check the local wiring codes in all cases and follow all local building codes. Wiring and hookup should be performed by a qualified electrician/installer only.

2. AC power should be supplied from a circuit breaker panel and must have its own dedicated circuit breaker. This supply must include a green ground conductor.

3. Use copper conductor wires with liquid tight flexible conduit UL listed for electric cable protection

14 AWG, 600V, 80°C
Terminal Block max Torque 2.1 Nm

4. Properly ground the gate operator to minimize or prevent damage from power surges and/or lightning. Use a grounding rod if necessary. A surge suppressor is recommended for additional protection.

AC POWER CONNECTION

To connect AC power to the controller:

1. Turn the circuit breaker for the AC gate operator power OFF before connecting the AC input wires.

2. Turn OFF the Power Switch located on the left side of enclosure before connecting the AC input wires.

3. Connect the AC input wires to the AC terminal located on the top left of the control box. See diagram below.

4. Batteries must be installed after the AC power is on. See Battery Power Connection.

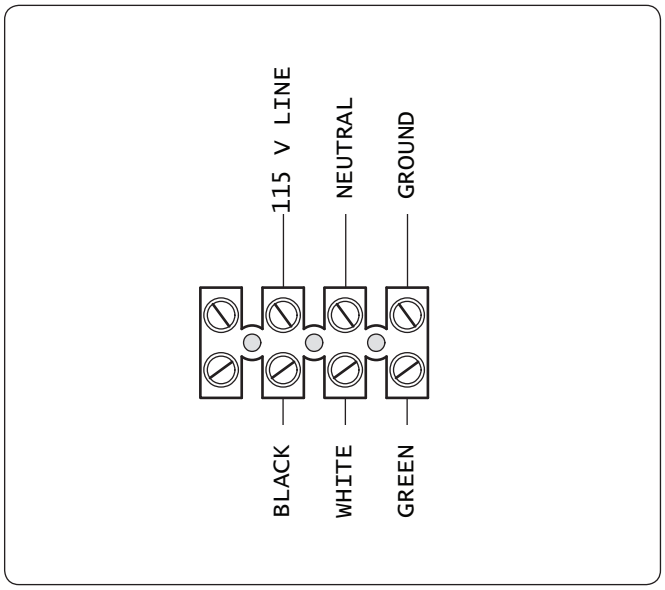

8.1 POWER SUPPLY

The E024U board is powered by a high efficiency switching power supply that takes 115VAC input and provides 36VDC to power the board. On the power supply board there is only one repleaceble fuse: **6.3A timed**

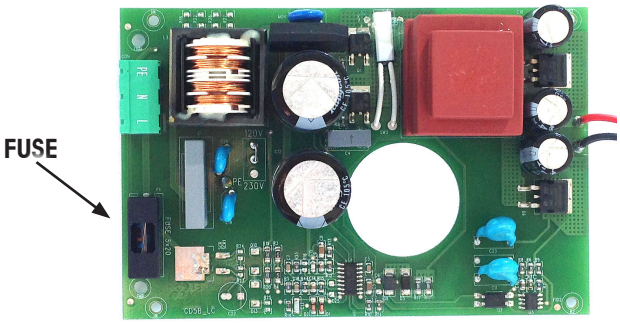

9. BACKUP BATTERY

The E024U board allows the connection of a 24V backup battery to provide power to operate the gate during blackouts. For more details about how the boards handles the loss of main power and how to configure its behaviour please see par 4.3 and DS1 switch 7.

To connect the battery use the provided cable and jumper. Plug the jumper from the red (+) terminal of first battery to the black (-) terminal on the second battery and then connect the battery cable red wire to the red (+) terminal on the second battery and the black wire to the black (-) terminal on the first battery. Finally plug the cable on the BATTERY connector on the board.

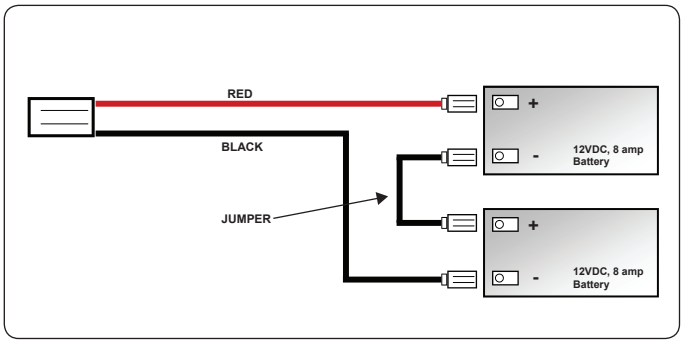

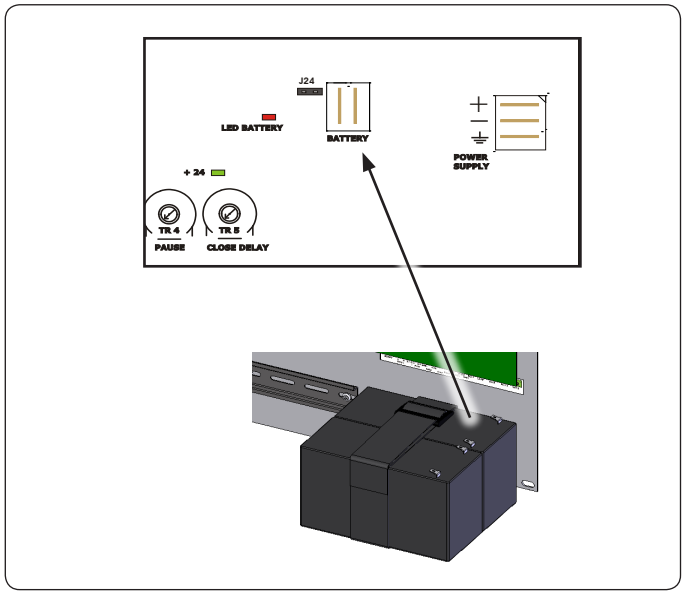

9.1 DISABLE THE BATTERY CHARGER

The internal battery charger must be disabled to use an external charger. To disable the battery charger unplug jumper J24

J24 PRESENT = BATTERY CHARGING ACTIVE
J24 NOT PRESENT = BATTERY CHARGING NOT ACTIVE

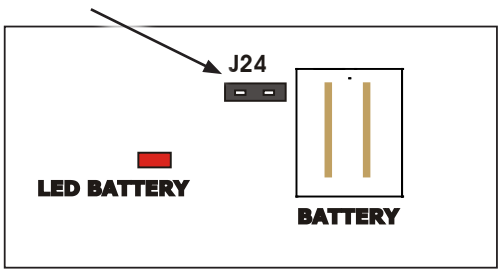

10. FIRMWARE UPGRADE

The E024U board keeps the operating firmware in a field programmable memory, it can be easily upgraded through the on board USB port

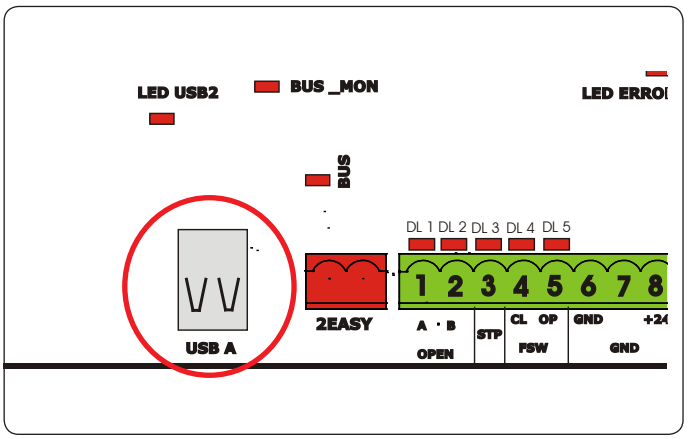

For the upgrade you need a USB Flash Drive, where you have to copy the file supplied by FAAC. Then follow these steps:

1. Disconnect the batteries if they are present.
2. Turn the AC power off and insert the Flash Drive into the USB A input on the board
3. Turn the AC power back on. The USB2 LED will start to flash to confirm the beginning of the software update. (WARNING: DON'T TURN THE POWER OFF OR REMOVE THE FLASH DRIVE UNTIL THE USB2 LED TURNS OFF.
4. Wait until the USB 2 LED turns off
5. Remove the USB Flash drive.
6. Cycle power, reconnect the batteries if needed and execute a new SETUP procedure (See chapter 6)

WARNING: Only upgrade the firmware with the proper file supplied by FAAC, otherwise the board could be damaged

10.1 VERIFY THE FIRMWARE VERSION

On initial power up watch the LED USB 1 on the bottom left of the board. The number of flashes indicate the version:
No Flashes = Version 1C, refer to manuals dated Jan. 2016 and before.
1 FLash = Version 1D refer to manuals dated after Jan. 2016

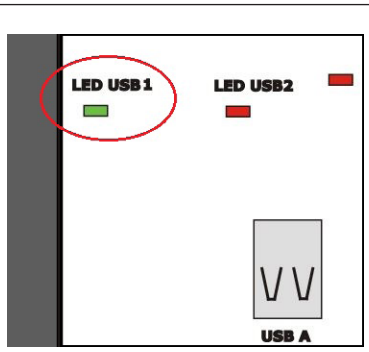

11. FUNCTION LOGICS

LOGIC "E"	PULSES					
SYSTEM STATUS	OPEN A	OPEN B	STOP	FSW OP	FSW CL	FSW CL/OP
CLOSED	opens the leaves	opens leaf 1	no effect (OPEN disabled)	no effect (OPEN disabled)	no effect	no effect (OPEN disabled)
OPENING	stops operation (1)	stops operation	stops operation	immediately reverses at closing	no effect	stops and opens at release (OPEN stops - saves CLOSE)
OPEN	recloses leaves immediately (1)	recloses leaves immediately	no effect (OPEN/CLOSE disabled)	no effect	no effect (CLOSE disabled)	no effect (OPEN/CLOSE disabled)
CLOSING	reopens leaves immediately	reopens leaves immediately	stops operation	no effect	reverses at opening	stops and opens at release (OPEN stops - saves CLOSE)
BLOCKED	closes leaves	closes leaves	no effect (OPEN/CLOSE disabled)	no effect (OPEN disabled)	no effect (CLOSE disabled)	no effect (OPEN stops - saves CLOSE)

(1) if the cycle began with OPEN-B (leaf 1), both leaves are activated at opening

LOGIC "A"	PULSES					
SYSTEM STATUS	OPEN A	OPEN B	STOP	FSW OP	FSW CL	FSW CL/OP
CLOSED	opens and closes after pause time	opens leaf 1 and closes after pause time	no effect (OPEN disabled)	no effect (OPEN disabled)	no effect	no effect (OPEN disabled)
OPENING	no effect (1)	no effect	stops operation	reverses at closing	no effect	stops and opens at release (saves CLOSE)
OPEN IN PAUSE	reloads pause time (1)	reloads pause time of released leaf	stops operation	no effect	recharges pause time (CLOSE disabled)	recharges pause time (CLOSE disabled)
CLOSING	reopens leaves immediately	reopens leaves immediately	stops operation	no effect	reverses at opening	stops and opens at release (saves CLOSE)
BLOCKED	closes leaves	closes leaves	no effect (OPEN/CLOSE disabled)	no effect (OPEN disabled)	no effect (CLOSE disabled)	no effect (OPEN/CLOSE disabled)

(1) if the cycle began with OPEN-B (leaf 1), both leaves are activated at opening

LOGIC "S"	PULSES					
SYSTEM STATUS	OPEN A	OPEN B	STOP	FSW OP	FSW CL	FSW CL/OP
CLOSED	opens and closes after pause time	opens released leaf and closes after pause time	no effect (OPEN disabled)	no effect (OPEN disabled)	no effect	no effect (OPEN disabled)
OPENING	no effect (1)	no effect	stops operation	reverses at closure	continues to open and recloses immediately	stops and opens at release (saves CLOSE)
OPEN IN PAUSE	recloses leaves immediately (1)	recloses leaves immediately	stops operation	no effect	stops and, at release, closes	stops and, at release, closes
CLOSING	reopens leaves immediately	reopens leaves immediately	stops operation	no effect	reverses at opening (see DS1-SW8) and closes immediately at end	stops and opens after release and closes immediately at end
BLOCKED	closes leaves	closes leaves	no effect (OPEN/CLOSE disabled)	no effect (OPEN disabled)	no effect (CLOSE disabled)	no effect (OPEN/CLOSE disabled)

(1) if the cycle began with OPEN-B (leaf 1), both leaves are activated at opening

LOGIC "EP"	PULSES					
SYSTEM STATUS	OPEN A	OPEN B	STOP	FSW OP	FSW CL	FSW CL/OP
CLOSED	opens the leaves	opens leaf 1	no effect (OPEN disabled)	no effect (OPEN disabled)	no effect	no effect (OPEN disabled)
OPENING	stops operation (1)	stops operation	stops operation	immediately reverses at closure	no effect	stops and opens at release (OPEN stops - saves CLOSE)
OPEN	recloses leaves immediately (1)	recloses leaves immediately	no effect (OPEN/CLOSE disabled)	no effect	no effect (CLOSE disabled)	no effect (OPEN/CLOSE disabled)
CLOSING	stops operation	stops operation	stops operation	no effect	reverses at opening	stops and opens at release (OPEN stops - saves CLOSE)
BLOCKED	restarts moving in opposite direction. Always closes after STOP	restarts moving in opposite direction. Always closes after STOP	no effect (OPEN/CLOSE disabled)	no effect (OPEN disabled)	no effect (CLOSE disabled)	no effect (OPEN stops - saves CLOSE)

(1) if the cycle began with OPEN-B (leaf 1), both leaves are activated at opening

LOGIC "AP"	PULSES					
SYSTEM STATUS	OPEN A	OPEN B	STOP	FSW OP	FSW CL	FSW CL/OP
CLOSED	opens and closes after pause time	opens leaf 1 and closes after pause time	no effect (OPEN disabled)	no effect (OPEN disabled)	no effect	no effect (OPEN disabled)
OPENING	stops operation (1)	stops operation	stops operation	reverses at closing (saves OPEN)	no effect	stops and opens at release (OPEN stops - saves CLOSE)
OPEN IN PAUSE	stops operation (1)	stops operation	stops operation	no effect	recharges pause time (CLOSE disabled)	recharges pause time (CLOSE disabled)
CLOSING	reopens leaves immediately	reopens leaves immediately	stops operation	no effect	reverses at opening (see DS1-SW8)	stops and opens at release (OPEN stops - saves CLOSE)
BLOCKED	closes leaves	closes leaves	no effect (OPEN/CLOSE disabled)	no effect (OPEN disabled)	no effect (CLOSE disabled)	no effect (OPEN/CLOSE disabled)

(1) if the cycle began with OPEN-B (leaf 1), both leaves are activated at opening

LOGIC "SP"	PULSES					
SYSTEM STATUS	OPEN A	OPEN B	STOP	FSW OP	FSW CL	FSW CL/OP
CLOSED	opens and closes after pause time	opens leaf 1 and closes after pause time	no effect (OPEN disabled)	no effect (OPEN disabled)	no effect	no effect (OPEN disabled)
OPENING	stops operation (1)	stops operation	stops operation	reverses at closure	continues to open and recloses immediately	stops and opens after release and closes immediately at end (OPEN stops - saves CLOSE)
OPEN IN PAUSE	recloses leaves immediately (1)	recloses leaves immediately	stops operation	no effect	stops and, at release, closes	stops and, at release, closes
CLOSING	stops operation	stops operation	stops operation	no effect	reverses at opening	stops and opens at release (saves CLOSE)
BLOCKED	restarts moving in opposite direction. Always closes after STOP	restarts moving in opposite direction. Always closes after STOP	no effect (OPEN/CLOSE disabled)	no effect (OPEN disabled)	no effect (CLOSE disabled)	no effect (OPEN/CLOSE disabled)

(1) if the cycle began with OPEN-B (leaf 1), both leaves are activated at opening

LOGIC "B"	PULSES					
SYSTEM STATUS	OPEN A	OPEN B	STOP	FSW OP	FSW CL	FSW CL/OP
CLOSED	opens the leaves	no effect	no effect (OPEN disabled)	no effect (OPEN disabled)	no effect	no effect (OPEN disabled)
OPENING	no effect	closes leaves	stops operation	reverses at closure	no effect	stops and, at release, closes (saves OPEN/CLOSE)
OPEN	no effect	closes leaves	no effect (OPEN/CLOSE disabled)	no effect	no effect (CLOSE disabled)	no effect (OPEN/CLOSE disabled)
CLOSING	opens the leaves	no effect	stops operation	no effect	reverses at opening	stops and opens at release (saves OPEN/CLOSE)
BLOCKED	opens the leaves	closes leaves	no effect (OPEN/CLOSE disabled)	no effect (OPEN disabled)	no effect (CLOSE disabled)	no effect (OPEN/CLOSE disabled)

LOGIC "C"	CONTINUOS COMMANDS		PULSES			
SYSTEM STATUS	OPEN A	OPEN B	STOP	FSW OP	FSW CL	FSW CL/OP
CLOSED	opens the leaves	no effect	no effect (OPEN disabled)	no effect (OPEN disabled)	no effect	no effect (OPEN disabled)
OPENING	no effect	closes leaves	stops operation	reverses at closure	no effect	stops and, at release, closes (saves OPEN/CLOSE)
OPEN	no effect	closes leaves	no effect (OPEN/CLOSE disabled)	no effect	no effect (CLOSE disabled)	no effect (OPEN/CLOSE disabled)
CLOSING	opens the leaves	no effect	stops operation	no effect	reverses at opening	stops and opens at release (saves OPEN/CLOSE)
BLOCKED	opens the leaves	closes leaves	no effect (OPEN/CLOSE disabled)	no effect (OPEN disabled)	no effect (CLOSE disabled)	no effect (OPEN/CLOSE disabled)

12. ACCESSORIES

12.1 SHADOW LOOP INTERFACE (p/n 790062)

Through the use of the XIB interface board you can connect an additional loop detector (center or shadow) to the E024U board to keep the gate open if vehicles are obstructing the closing path. With a dip switch setting the shadow loop can function on both opening and closing (see section 4.3)

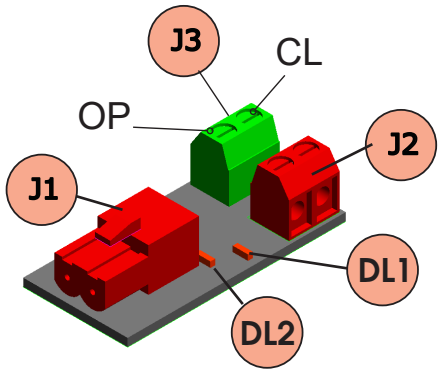

XIB board description

J1 (RED)	Connects to "2easy" BUS input on the E024U
J2 (RED)	Terminal for the connection of the encoder
J3 CL (GREEN)	Terminal for the NC connection of the shadow loop detector
J3 OP (GREEN)	Terminal for the NC connection of second open safety
DL1	LED for diagnostics of devices connected to the J3 OP
DL2	LED for diagnostics of devices connected to the J3 CL

INSTALLING THE INTERFACE

1. Turn power OFF
2. Plug in the XIB interface to the 2EASY connector on the E024U board
3. Wire the shadow loop detector NC output to the CL input on the XIB board as in figure below
4. Connect Common from loop detector to GND (terminal 6) on E024U
5. If no second open safety device is present jump out the OP input on XIB board to GND (terminal 6) on the E024U
6. Wire the encoder (if needed) to J2
7. Refer to Fig. A11 for the wiring schematic
8. Turn power back ON
9. Press and release the SW1 button quickly. The board will recognize that the XIB board has been removed
10. Re-program run time if needed.

XIB board connections with no opening safety

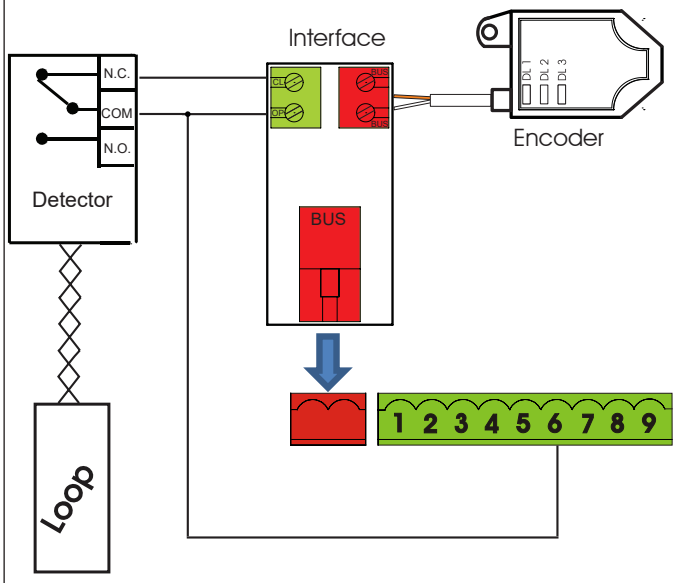

Fig. A11

REMOVING THE INTERFACE

1. Turn power OFF
2. Unplug the board and remove the wiring
3. Move the encoder wires (if present) to the 2EASY connector on the board
4. Turn power back ON
5. Verify that leaf 1 & 2 lights on the encoder are correct
6. Press and release the SW1 button quickly. The board will recognize that the XIB board has been removed
7. Re-program run time if needed.

NOTE:

- Do not connect the shadow loop detector in series with regular closing safety devices.
- If the E024U board doesn't have the correct software installed the shadow loop will act as a normal closing safety, detecting also the gate itself and not allowing the closing movement to complete. Please contact technical support for assistance in that case.

SECOND OPEN SAFETY INPUT

The OP input on the XIB board can be used as a second monitored open safety input.

When open safety monitoring is turned ON on the E024U board (Dip SW 12 ON) the OP input on the XIB (J3 OP) is monitored and can be used to protect an entrapment zone. See Fig. A12a/b for the connections.

In case only one opening safey input is needed and the XIB board is present connect the opening safey photocell to FSW OP on the E024U and J3 OP on the XIB in parallel. See Fig. A13a/b for the connections.

XIB board connections and second opening safety

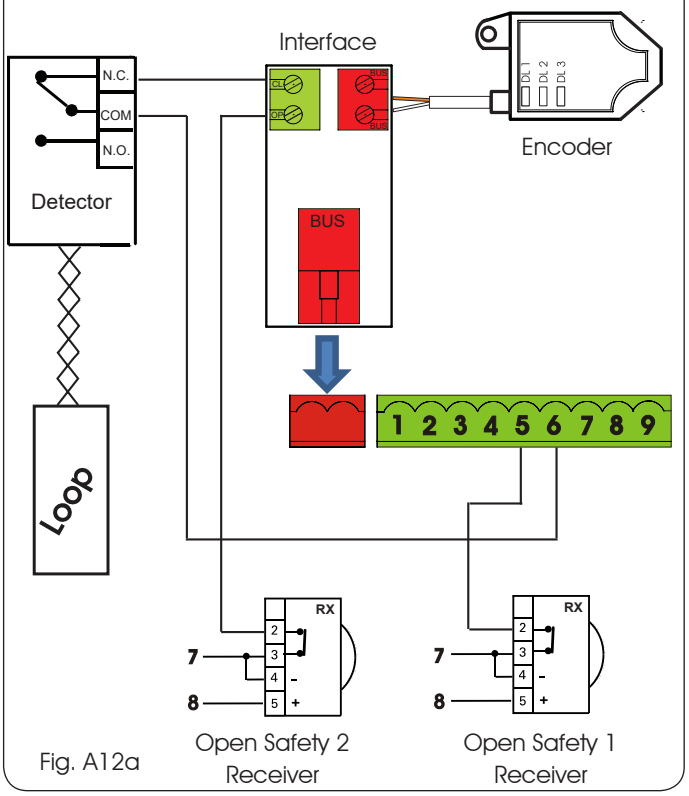

Fig. A12a

XIB board connections and only one opening safety

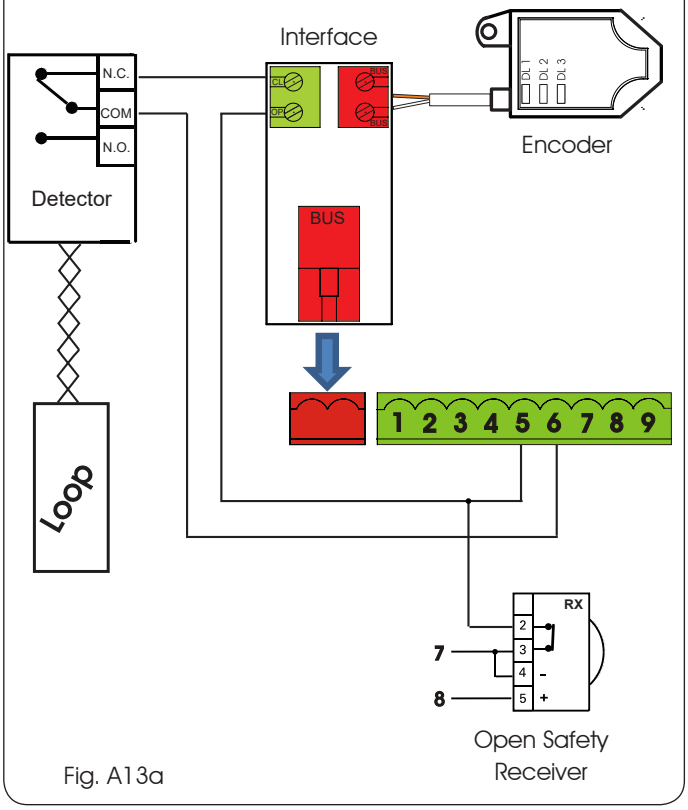

Fig. A13a

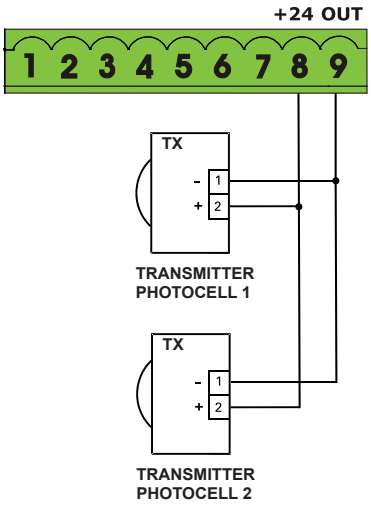

Fig. A12b

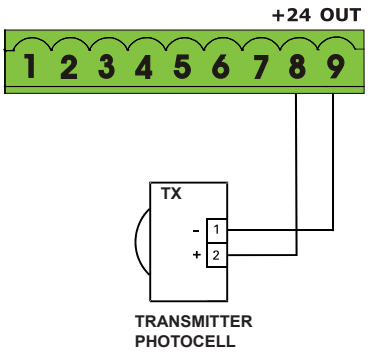

Fig. A13b

DIAGNOSTIC TABLE				
	OFF	SLOW FLASHING (FLASH EVERY 5 secs.)	ON STEADY	FAST FLASHING (FLASH EVERY 0.5 sec)
DL1	"XIB" board malfunction or no power	J3 OP terminal open (missing jumper on the OP input)	J3 OP terminal closed (normal condition)	Error condition on the BUS
DL2	"XIB" board malfunction or no power	J3 CL terminal open (loop detector active or not connected)	J3 CL terminal closed (loop detector in idle condition)	

12.2 LOOP DETECTORS INTERFACE (p/n 2670)

The Loop Detector Interface allows connection of up to three plug-in detectors associated with standard functions. The board is designed to fit in the FAAC standard 16" x 14" enclosure on the existing DIN rail. To connect the interface board:

1) Connect the 2EASY BUS from the E024U to the interface board (no polarity) - Green Wires

2) Connect pin 8 on the E024U board (+24V) to the +24 input on the interface board - Red Wire

3) Connect pin 7 on the E024U board (GND) to the GND input on the interface board - Black Wire

4) Connect the loops to the interface board as in the figure below

Turn the power on on the E024U board. The LED on the interface board will blink briefly and then will stay ON solid if the BUS connection is working correctly.

IMPORTANT: Briefly press the SW1 button on the E024U board to make it aware of the presence of the additional interface board.

To make sure the board is working properly you can check the behaviour of BUS LED on the E024U board. It will be normally on when none of the loop detectors is active. If any of the detectors is activated the LED will turn off.

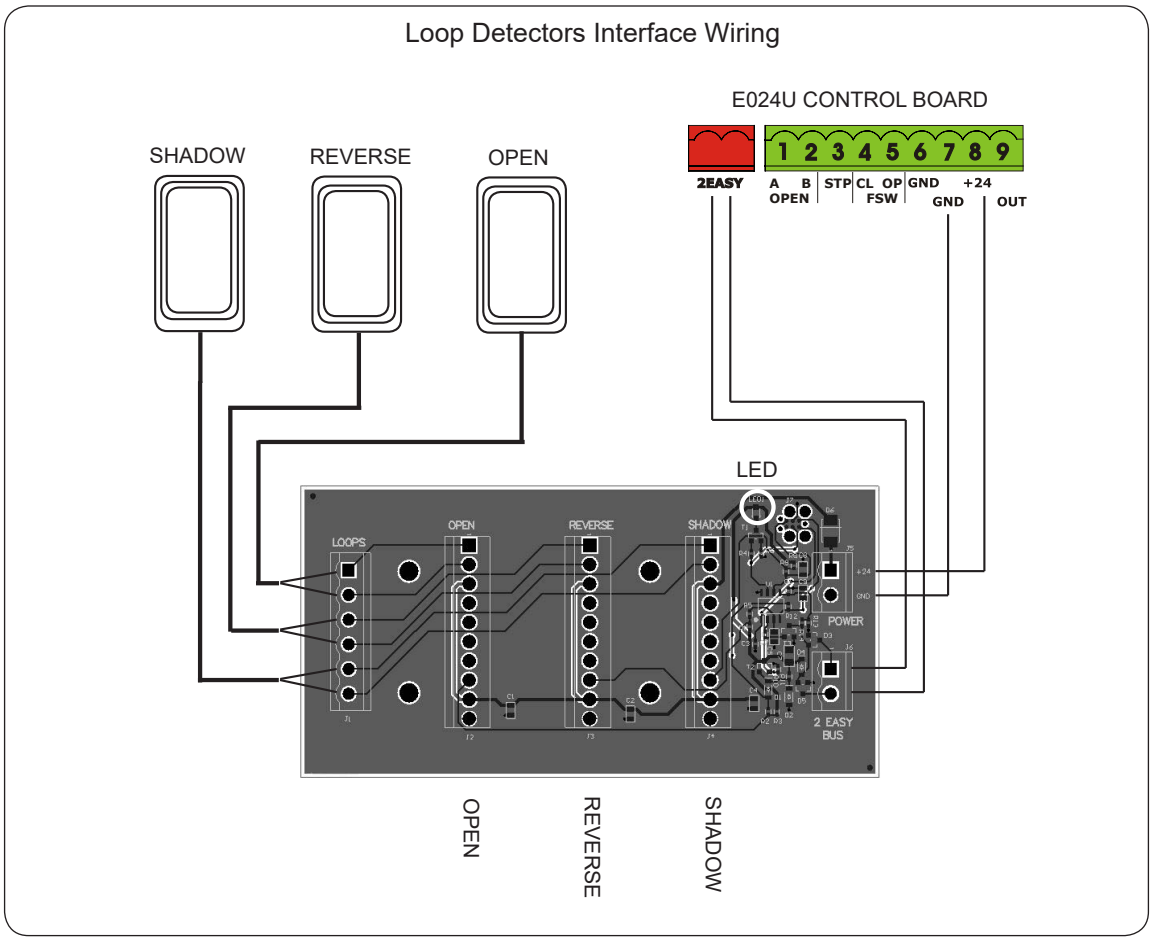

NOTE: You can use the shadow loop interface OR the loop detectors interface but not both at the same time. If two monitored open safeties are required the additional loop detectors (other than the shadow) must be wired directly to the E024U board.

LIMITED WARRANTY

To the original purchaser only:

FAAC International, Inc., warrants, for twenty-four (24) months from the date of invoice, the gate operator systems and other related systems and equipment manufactured by FAAC S.p.A. and distributed by FAAC International, Inc., to be free from defects in material and workmanship under normal use and service for which it was intended provided it has been properly installed and operated.

FAAC International, Inc.'s obligations under this warranty shall be limited to the repair or exchange of any part of parts manufactured by FAAC S.p.A. and distributed by FAAC International, Inc. Defective products must be returned to FAAC International, Inc., freight prepaid by purchaser, within the warranty period. Items returned will be repaired or replaced, at FAAC International, Inc.'s option, upon an examination of the product by FAAC International, Inc., which discloses, to the satisfaction of FAAC International, Inc., that the item is defective. FAAC International, Inc. will return the warranted item freight prepaid. The products manufactured by FAAC S.p.A. and distributed by FAAC International, Inc., are not warranted to meet the specific requirements, if any, of safety codes of any particular state, municipality, or other jurisdiction, and neither FAAC S.p.A. or FAAC International, Inc., assume any risk or liability whatsoever resulting from the use thereof, whether used singly or in combination with other machines or apparatus.

Any products and parts not manufactured by FAAC S.p.A. and distributed by FAAC International, Inc., will carry only the warranty, if any, of the manufacturer. This warranty shall not apply to any products or parts thereof which have been repaired or altered, without FAAC International, Inc.'s written consent, outside of FAAC International, Inc.'s workshop, or altered in any way so as, in the judgment of FAAC International, Inc., to affect adversely the stability or reliability of the product(s) or has been subject to misuse, negligence, or accident, or has not been operated in accordance with FAAC International, Inc.'s or FAAC S.p.A.'s instructions or has been operated under conditions more severe than, or otherwise exceeding, those set forth in the specifications for such product(s). Neither FAAC S.p.A. nor FAAC International, Inc., shall be liable for any loss or damage whatsoever resulting, directly or indirectly, from the use or loss of use of the product(s). Without limiting the foregoing, this exclusion from liability embraces a purchaser's expenses for downtime or for making up downtime, damages for which the purchaser may be liable to other persons, damages to property, and injury to or death of any persons.

FAAC S.p.A. or FAAC International, Inc., neither assumes nor authorizes any person to assume for them any other liability in connection with the sale or use of the products of FAAC S.p.A. or FAAC International, Inc. The warranty herein above set forth shall not be deemed to cover maintenance parts, including, but not limited to, hydraulic oil, filters, or the like. No agreement to replace or repair shall constitute an admission by FAAC S.p.A. or FAAC International, Inc., of any legal responsibility to effect such replacement, to make such repair, or otherwise. This limited warranty extends only to wholesale customers who buy directly through FAAC International, Inc.'s normal distribution channels. FAAC International, Inc., does not warrant its products to end consumers.

Consumers must inquire from their selling dealer as to the nature and extent of that dealer's warranty, if any. This warranty is expressly in lieu of all other warranties expressed or implied including the warranties of merchantability and fitness for use. This warranty shall not apply to products or any part thereof which have been subject to accident, negligence, alteration, abuse, or misuse or if damage was due to improper installation or use of improper power source, or if damage was caused by fire, flood, lightning, electrical power surge, explosion, wind storm, hail, aircraft or vehicles, vandalism, riot or civil commotion, or acts of God.

© 2016, FAAC International, Inc. - All Rights Reserved
Published in Sept. 2016